TAOGLAS

Datasheet

Multiband GNSS Front End

Part No:
TFM.110A

Description

Surface Mount GNSS Front End Active Electronics

Covering the full Multiband GNSS Spectrum excluding the L-Bands

Features:

Two-stage LNA providing >25 dB Gain across all bands

Low Noise Figure: <3.5 dB in low bands and <4.0 dB in high bands

Vin = +1.8 to +5.5 VDC

Easy to integrate surface-mount

Dimensions: 15 x 15 x 2.7 mm

RoHS & Reach Compliant

1.	Introduction	2
2.	Specification	4
3.	FEM Characteristics	6
4.	Mechanical Drawing	9
5.	Module Integration	10
6.	Solder Reflow Profile	17
7.	Packaging	18
	Changelog	19

Taoglas makes no warranties based on the accuracy or completeness of the contents of this document and reserves the right to make changes to specifications and product descriptions at any time without notice. Taoglas reserves all rights to this document and the information contained herein. Reproduction, use or disclosure to third parties without express permission is strictly prohibited.

Ireland & USA ISO 9001:2015 Certified

Taiwan ISO 9001:2015 Certified

IATF16949

1. Introduction

The Taoglas TFM.110A is a surface-mount active electronics GNSS front end which covers L1/L2/L5 for multiband multi-constellation high-precision applications. The TFM.110A is a single input, single output module and features a SAW/LNA/SAW/LNA topology in the signal path to prevent unwanted out-of-band interference from overdriving the GNSS LNAs or receiver. The SAW filters have been carefully selected and placed to provide excellent out-of-band rejection while also maintaining low noise figure.

Many currently available dual-band GNSS receivers require additional RF circuits between the antenna and the receiver to properly set the overall system noise figure. This requires additional development time for an otherwise simple integration. Many organizations don't have the RF expertise to effectively design such a solution. The TFM.110A captures the required additional RF circuits in modular form, allowing the designer to simply place the TFM.110A between their GNSS antenna and GNSS receiver.

The TFM.110A offers > 25 dB gain across all applicable bands while maintaining a high Input P1dB of -25 dBm or better. Noise Figure is < 3.5 dB in the low bands and < 4.0 dB in the high bands. A wide input voltage of +1.8 to +5.5 VDC allows for easy integration in most GNSS systems.

TFM.110A Features and Benefits:

- Ease-of-integration – Single-package solution combines impedance matching, filter efficiency and low noise design for easy, drop-in use with any antenna or GNSS receiver
- Low-noise System Design – Integrated pre-filters deliver exceptional out-of-band rejection across multiple band configurations and neighboring interference to properly set noise figure
- Dual-gain Stage Architecture – Cascaded LNAs, pre-filters and optimized impedance matching deliver sufficient gain to the GNSS receiver without signal-to-noise overload
- Low-profile Form Factor – Small footprint and low-profile design saves valuable real estate without the need for external components and routing
- Accelerated Development Cycles – 2+ years of development by antenna and RF design experts, delivering the highest levels of integration, manufacturability and robustness in a single package

For further information, please contact your regional Taoglas customer support team.

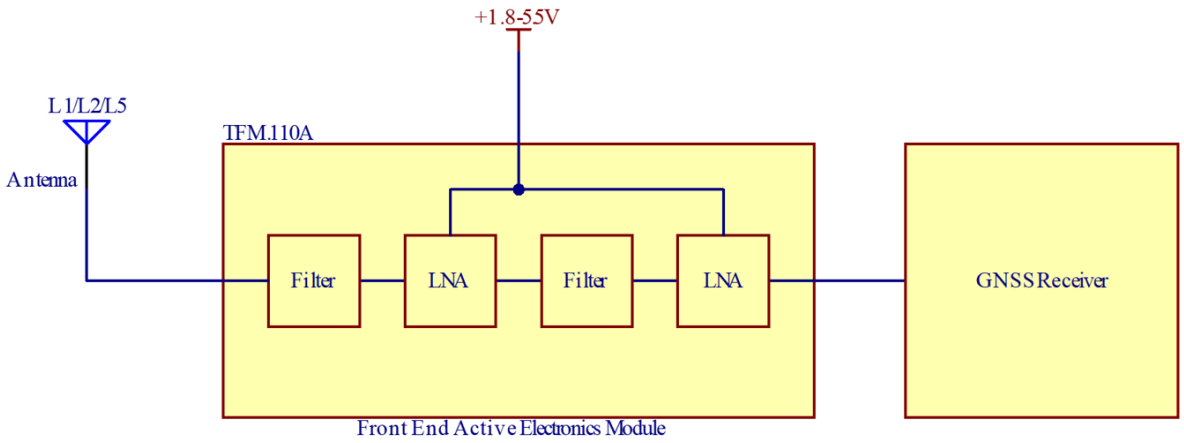

We used the GVLB258.A to demonstrate the integration of this module but please note that we have other compatible antennas that can also be used alongside the TFM.110A please see table below.

Block diagram of the integration for the TFM.110A.

Compatible Antennas
GVLB258.A
GGBLA.125.A
GGSFTP.50.7.A.08
GPSF.36.7.A.30
HP5010A
GPVBSF.25.8.A
GPVSF.25.8.A.08
FXP612.07.0095A
TFX125.A
HP2258.A

2. Specification

GNSS Frequency Bands					
GPS	L1 1575.42 MHz	L2 1227.6 MHz	L5 1176.45 MHz		
	■	■	■		
GLONASS	G1 1602 MHz	G2 1248 MHz	G3 1207 MHz		
	■	□	□		
Galileo	E1 1575.24 MHz	E5a 1176.45 MHz	E5b 1201.5 MHz	E6 1278.75 MHz	
	■	□	□	□	
BeiDou	B1C 1575.42 MHz	B1I 1561 MHz	B2a 1176.45 MHz	B2b 1207.14 MHz	B3 1268.52 MHz
	■	□	□	□	□
L-Band	L-Band 1542 MHz				
	□				
QZSS (Regional)	L1 1575.42 MHz	L2C 1227.6 MHz	L5 1176.45 MHz	L6 1278.75e6	
	■	■	■	□	
IRNSS (Regional)	L5 1176.45 MHz				
	■				
SBAS	L1/E1/B1 1575.42 MHz	L5/B2a/E5a 1176.45 MHz	G1 1602 MHz	G2 1248 MHz	G3 1207 MHz
	■	■	■	□	□

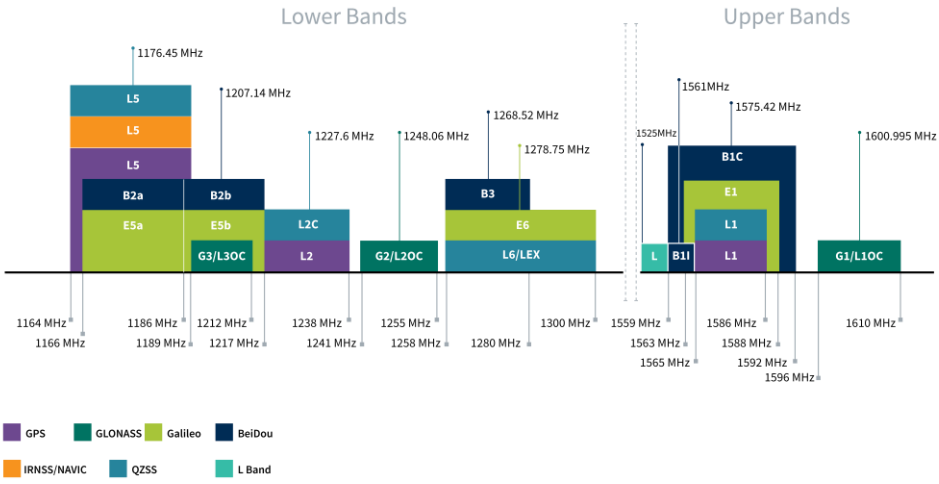

GNSS Bands and Constellations

Electrical									
Frequency (MHz)	**1166**	**1176**	**1186**	**1197**	**1227**	**1249**	**1559**	**1575.42**	**1606**
Noise Figure (dB)	2.9	2.7	2.6	2.5	3.1	3.1	3.3	3.1	3.6
Gain (dB)	29	30	30	31	30	31	27	26	25
Group Delay (ns)	22	20	18	19	17	23	16	16	23
Input P1dB (dBm)	-23	-24	-24	-24	-22	-23	-18	-18	-17
Input Return Loss (dB)	-10	-11	-12	-13	-11	-14	-11	-11	-13
Output Return Loss	-9	-9	-10	-14	-14	-17	-24	-31	-25
Vin	+1.8 to +5.5 VDC								
Typical Current (@1.8V)	7.5 – 9.0mA								

***Note: Tested on evaluation board. Board losses removed.**

Mechanical	
Height	2.76mm
Planar Dimension	15.50 x 15.50mm

Environmental	
Temperature Range	-40°C to 85°C
RoHS Compliant	Yes
REACH Compliant	Yes
Moisture Sensitivity Level (MSL)	3

3. FEM Characteristics

3.1 Input Return Loss

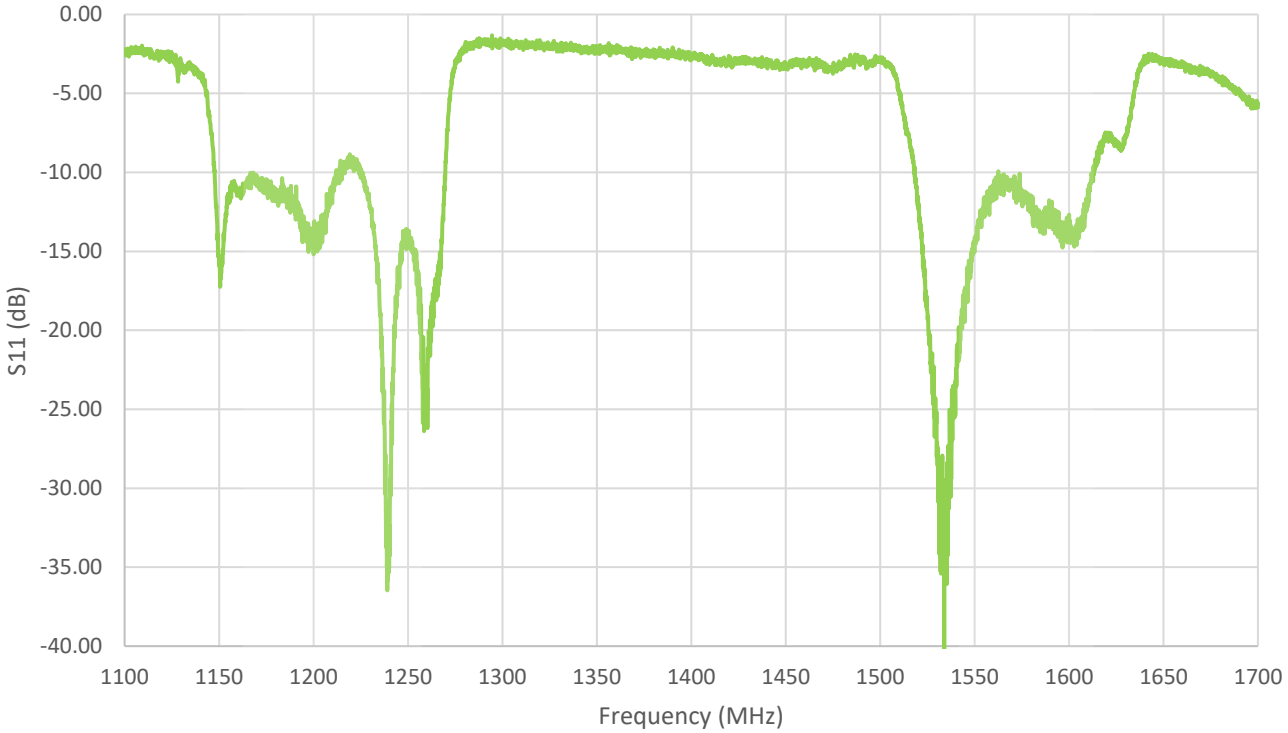

3.2 Output Return Loss

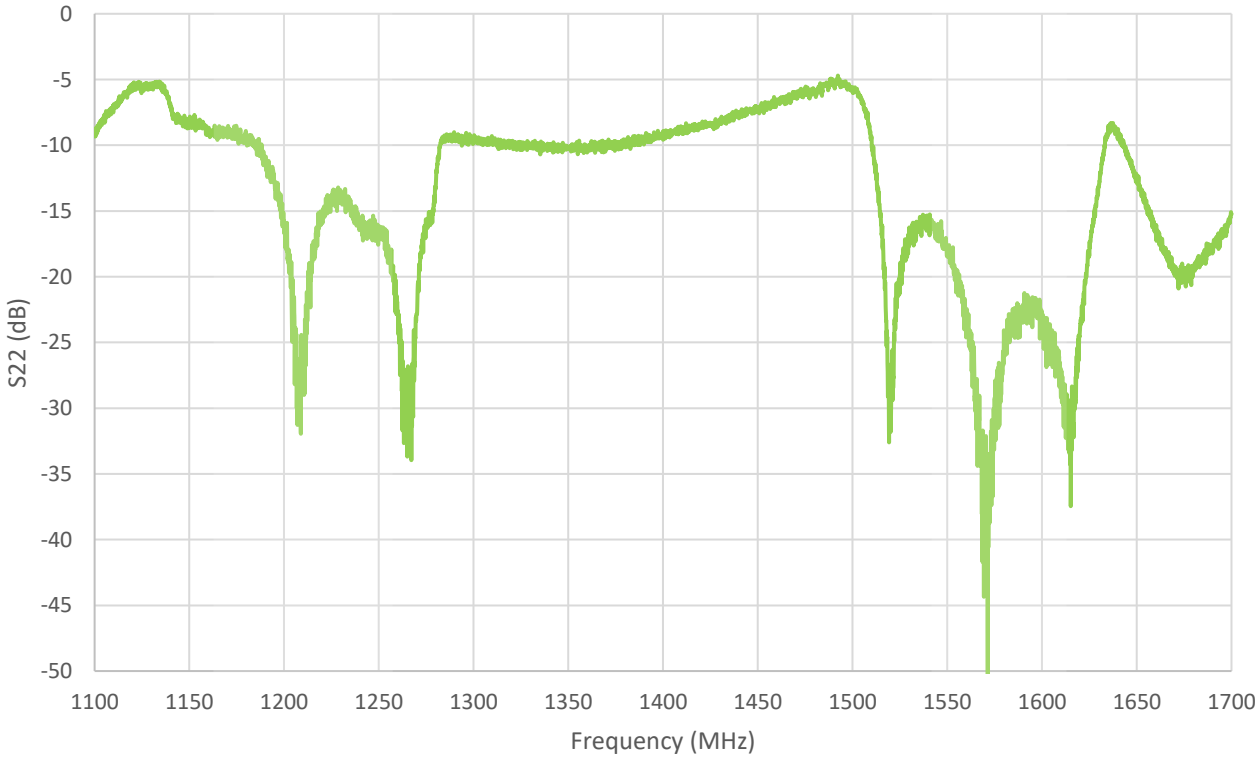

3.3 Noise Figure

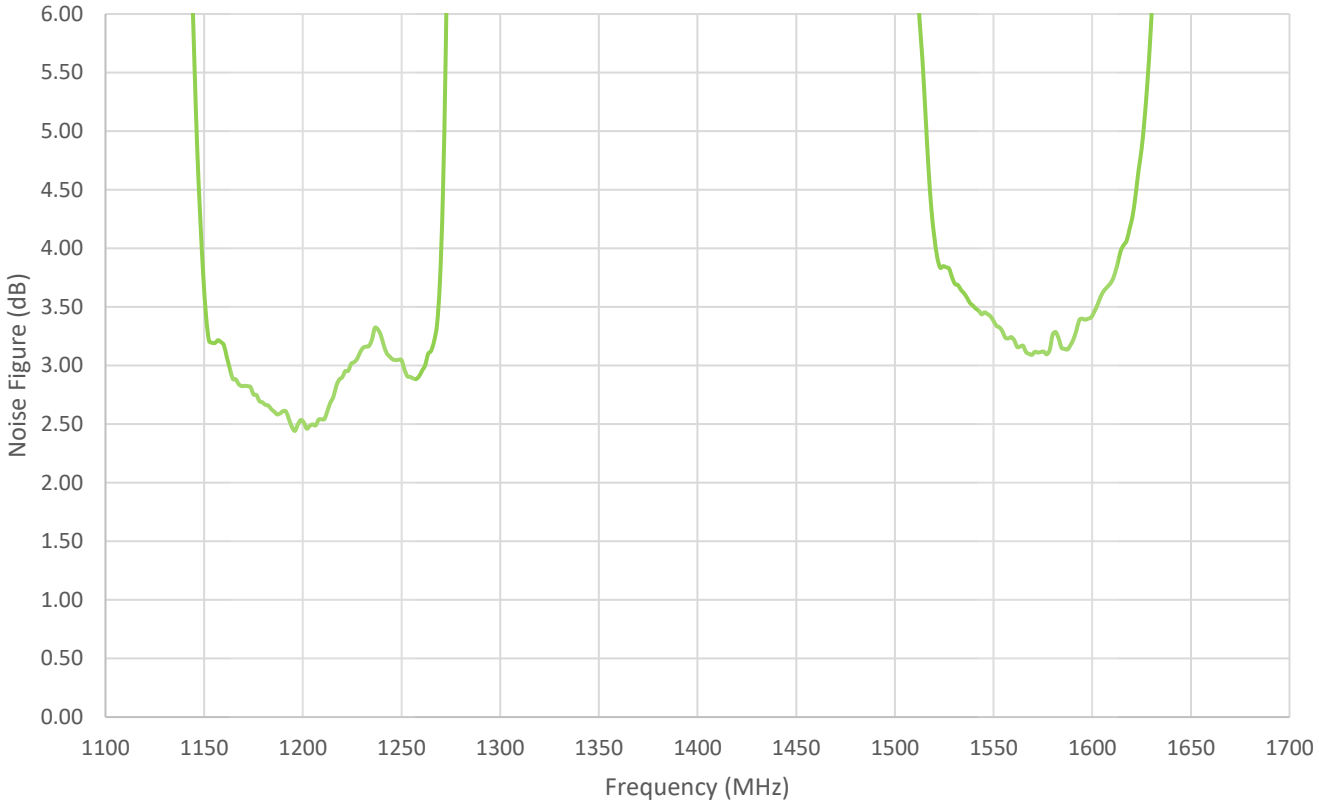

3.4 In-Band Gain

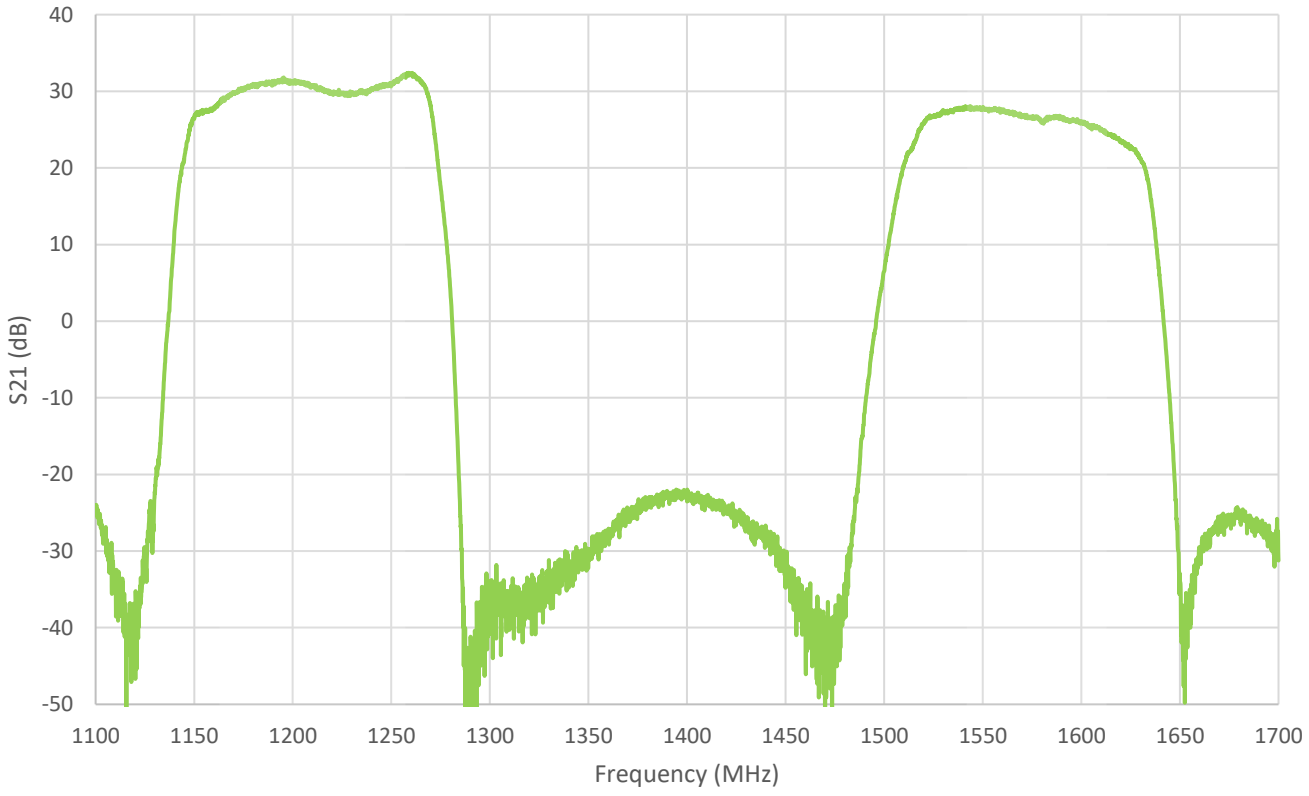

3.5 Wideband Gain

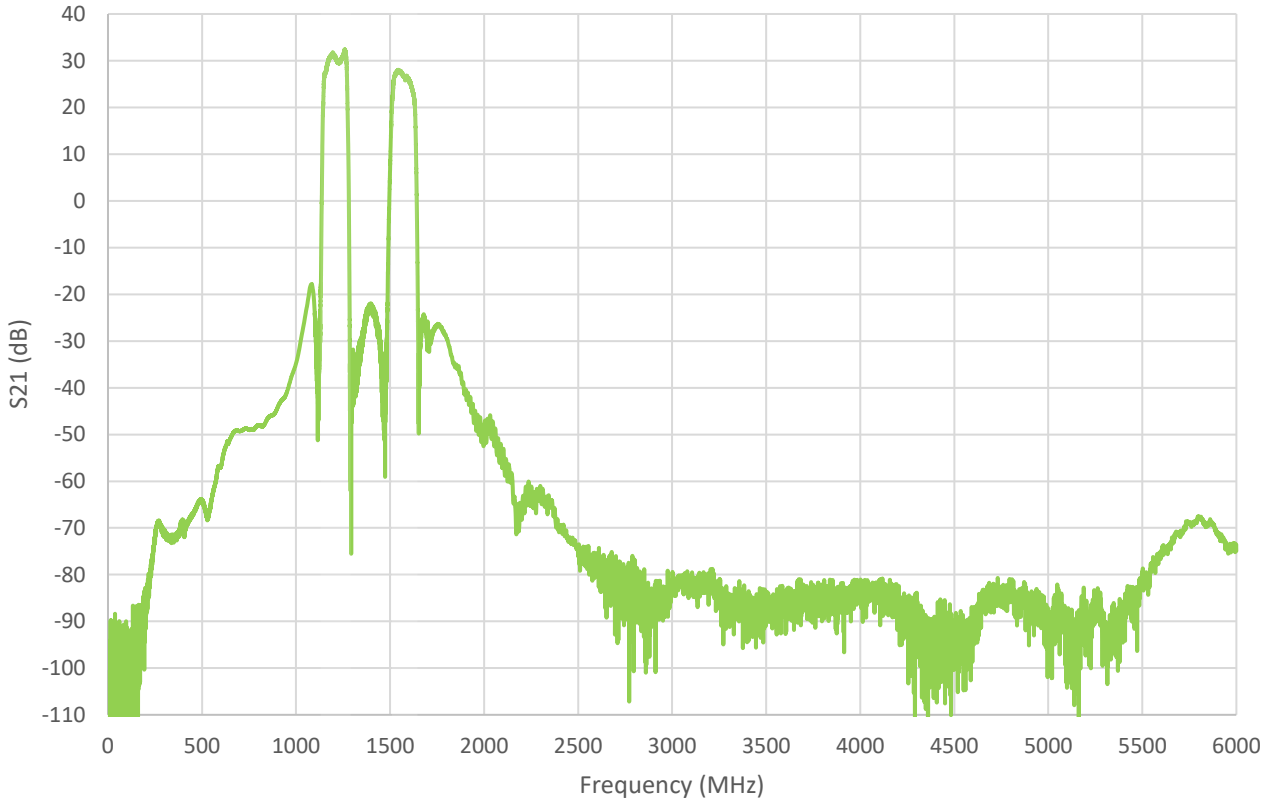

3.6 Group Delay

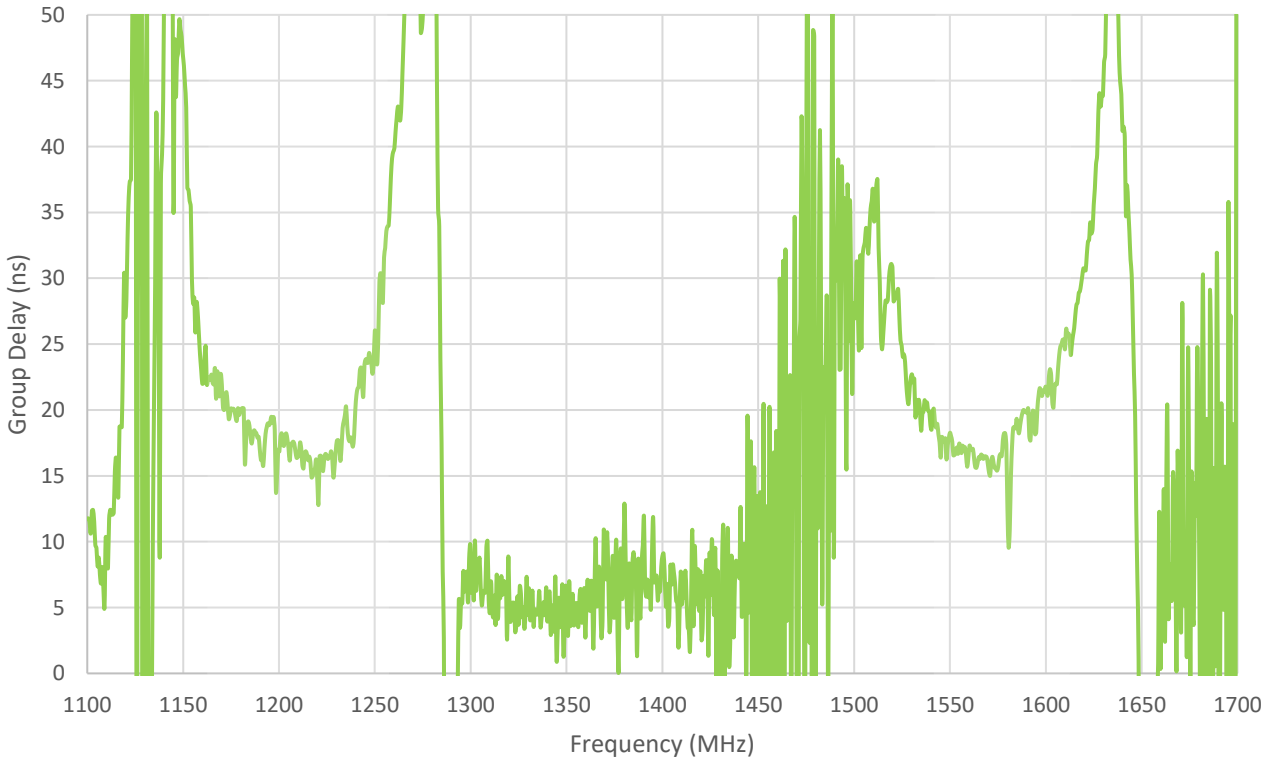

4. Mechanical Drawing

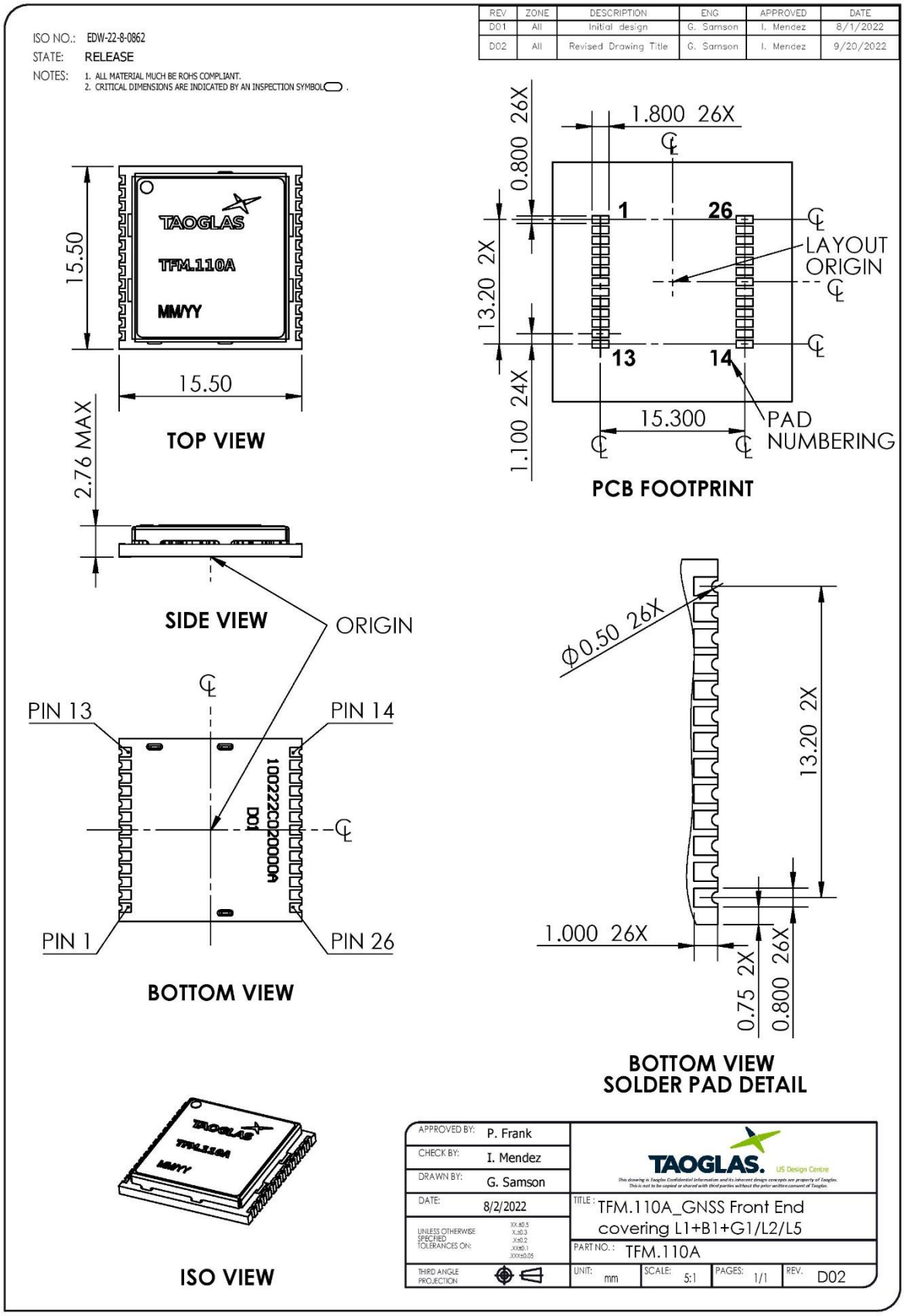

5. Module Integration

The following is an example on how to integrate the TFM.110A into a design. In this example, the GVLB258.A is used as the antenna. This antenna has one pin, which is used for the L1/L2/L5 bands. The TFM.110A is powered from a separate power DC supply (1.8V-5.5V). The output of the TFM.110A can then be fed to a relevant GNSS receiver module. Taoglas recommends using a minimum of 70x70mm ground plane (PCB) to ensure optimal performance.

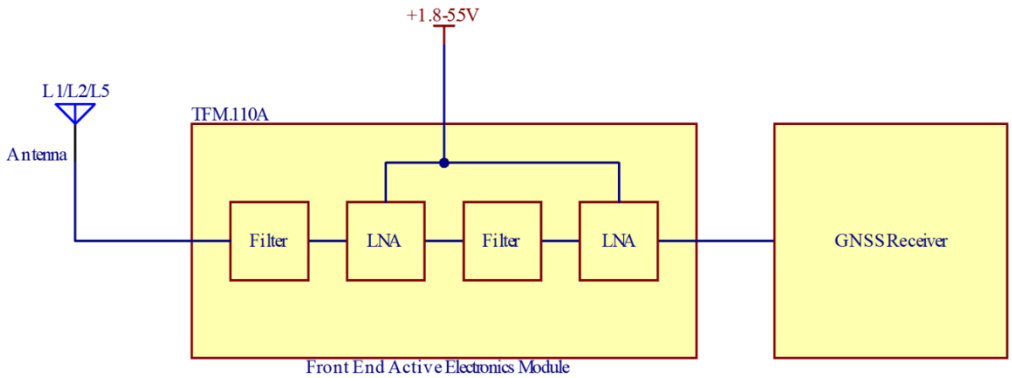

Block Diagram of integration of the TFM.110A

Top and bottom view of PCB.

Please find the Integration files in Altium, 2D formats and the 3D model for the TFM.110A here: https://www.taoglas.com/product/tfm-110a-gnss-front-end-multiband-gnss/

Top and bottom view of PCB.

5.1 Schematic Symbol and Pin Definitions

Above is a 3D model of the TFM.110A on a PCB.

The circuit symbol for the TFM.110A is shown below. The front-end module has 26 pins as indicated below.

Pin	Description
1-11, 13-14, 16-24, 26	Ground
12	Signal Output
15	Voltage Input
25	Signal Input

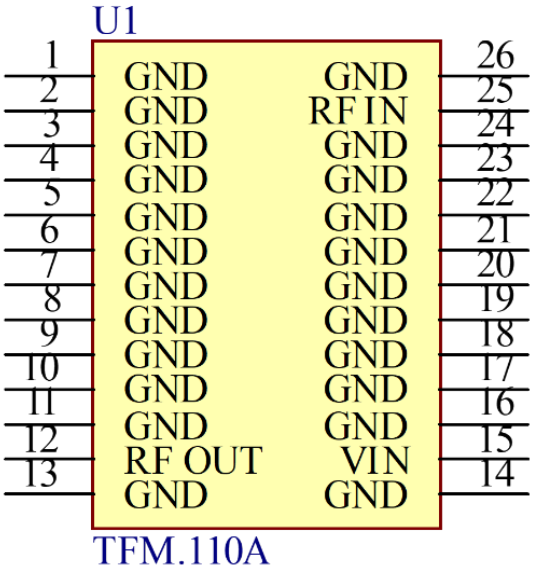

Above is a schematic symbol of TFM.110A and a table of the pin definitions.

5.2 Schematic Layout

Matching components with the TFM.110A are required for the module to have optimal performance in the spaces specified in the schematic below. Additional matching components may be necessary for your device, Taoglas recommends incorporating extra component footprints, forming a “pi” network, between the TFM.110A and the antenna. Matching components should also be placed between the RF output pin and the GNSS receiver module input pin.

Taoglas recommends placing an ESD diode and decoupling capacitor (100pF) on the input pin of the supply rail.

Note: The RF In & RF out of the TFM module are all DC-blocked internally. External DC block capacitors are not required.

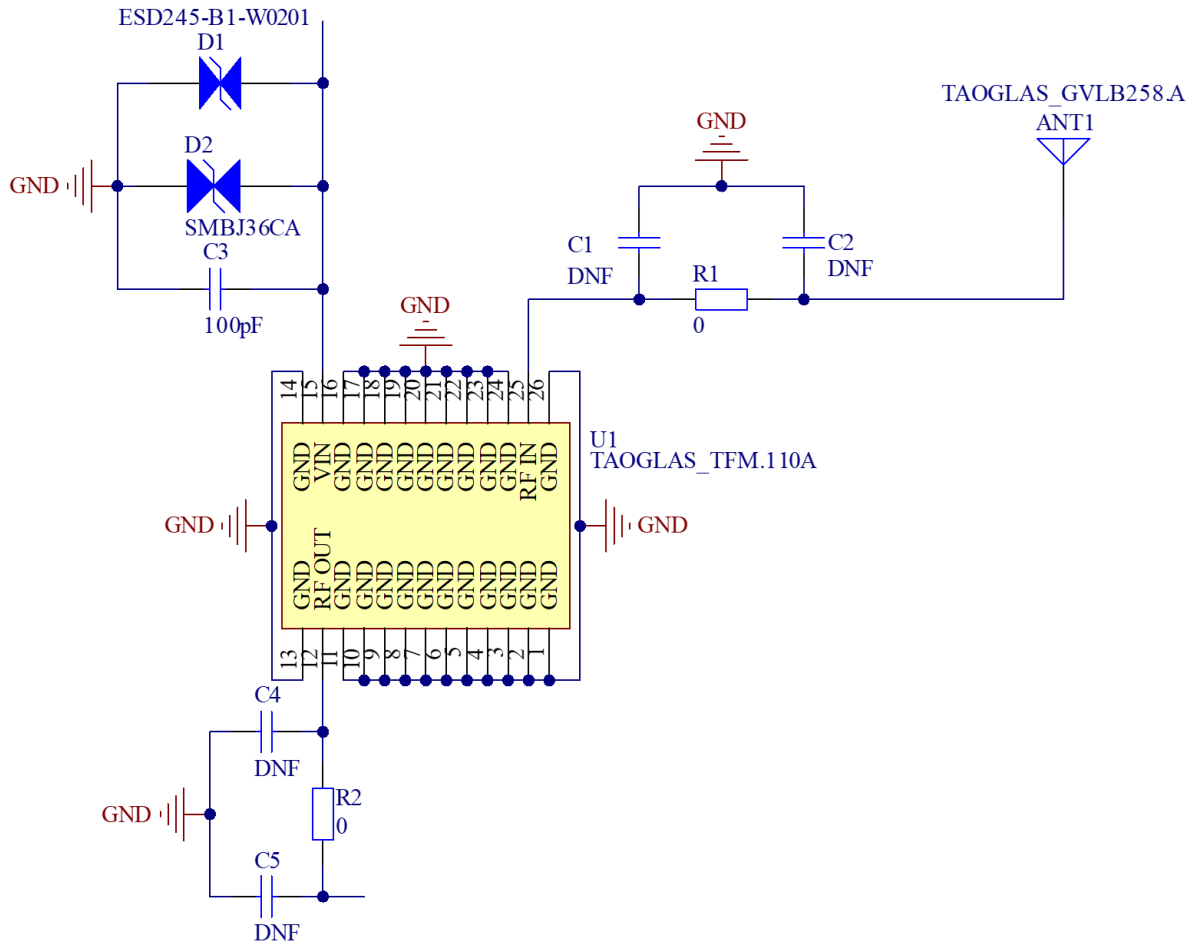

Designator	Type	Value	Manufacturer	Manufacturer Part Number
C1, C2, C4, C5	Capacitor	Not Fitted	-	-
C3	Capacitor	100pF	Murata	GRM1555C1H101JA01D
D1	Diode	-	Infineon	ESD245B1W0201E6327XTSA1
D2	Diode	-	Littelfuse	SMBJ36CA
R1, R2	Resistor	0 Ohms	YAGEO	RC0402JR-070RL

5.3 Module Integration

The TFM.110A should be placed as close to the signal input and output as possible to shorten the length of the transmission lines. The RF IN/OUT traces must maintain a 50 Ohm transmission line. A Pi Matching Network is recommended for the RF IN transmission line, the values and components for the matching circuit will depend on the tuning needed. Ground vias should be placed beside each ground pad and the DC Voltage input should be between +1.8 and +5.5 VDC. It's recommended that the DC Voltage input should be coupled with a 100pF Capacitor and an ESD Diode.

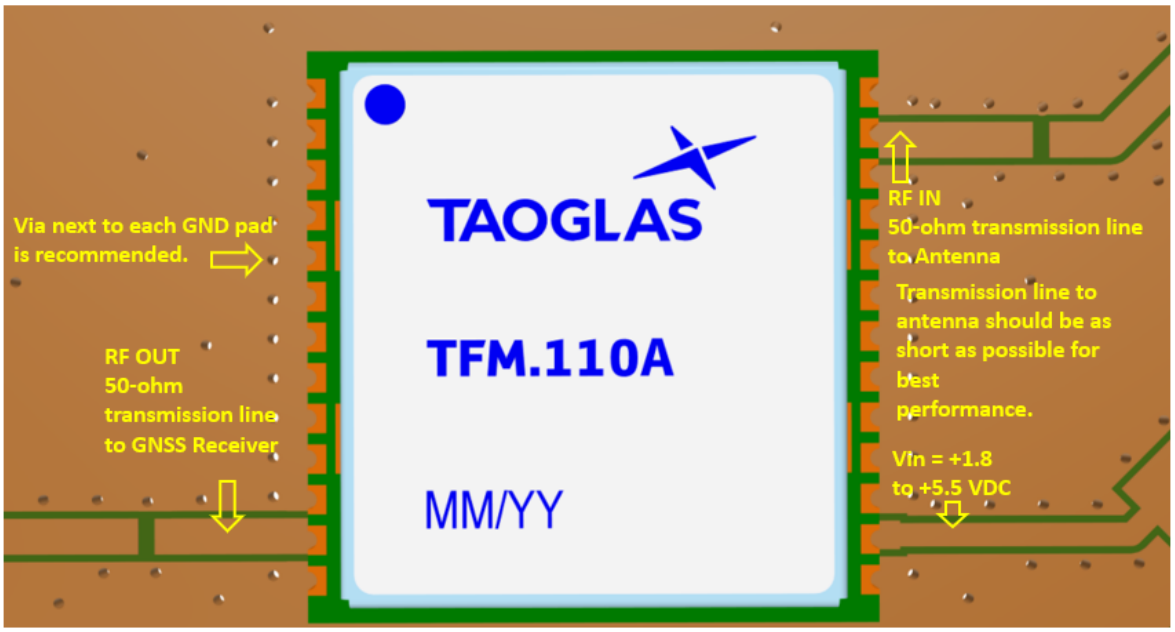

TFM.110A module mounted on a PCB, showing transmission lines and integration notes.

5.4 Module Footprint

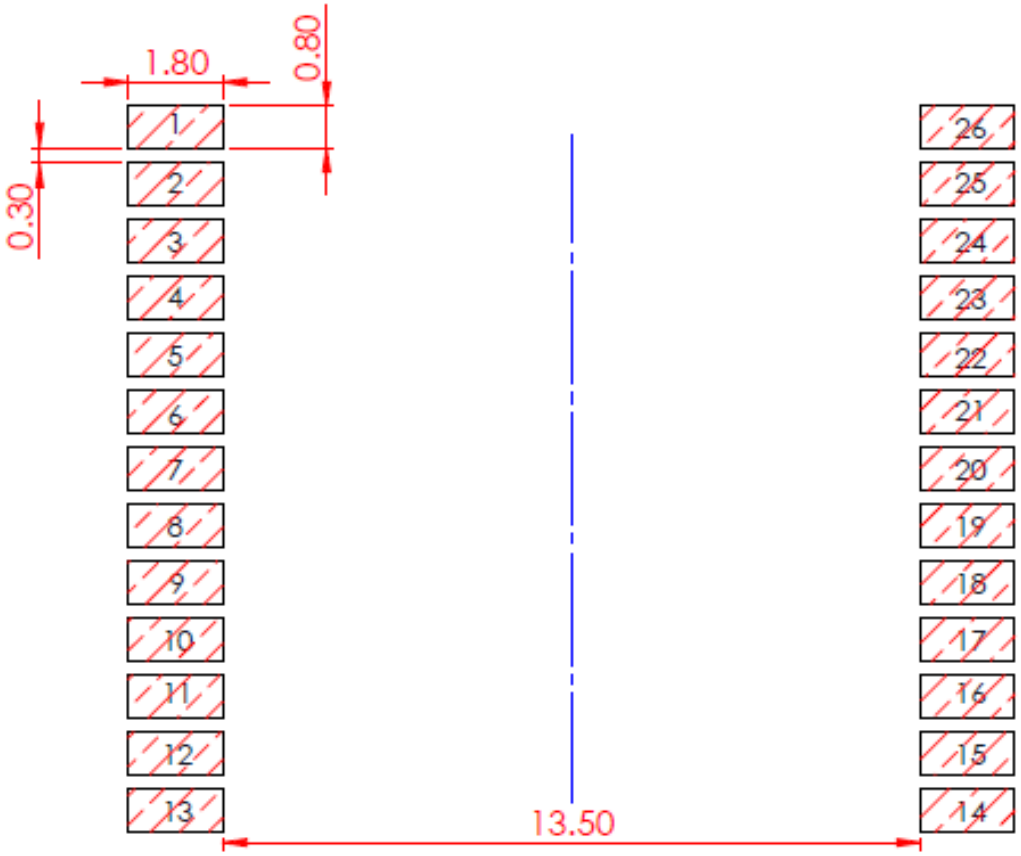

PIN	DESCRIPTION	PIN	DESCRIPTION
1	GND	14	GND
2	GND	15	VIN
3	GND	16	GND
4	GND	17	GND
5	GND	18	GND
6	GND	19	GND
7	GND	20	GND
8	GND	21	GND
9	GND	22	GND
10	GND	23	GND
11	GND	24	GND
12	RF OUT	25	RF IN
13	GND	26	GND

5.5 Copper Clearance for TFM.110A

The footprint and clearance on the PCB must comply with the front-end module's specification. The PCB layout shown in the diagrams below demonstrates the TFM.110A clearance area for Pin 12 (RF OUT Pad) and Pin 25 (L1/L2/L5 IN Pad). The copper keep out area only applies to the same layer that the TFM110.A has been placed on. There should be 0.3mm copper clearance between the feed pad and ground pads with at least a 0.6mm copper clearance from the ground plane.

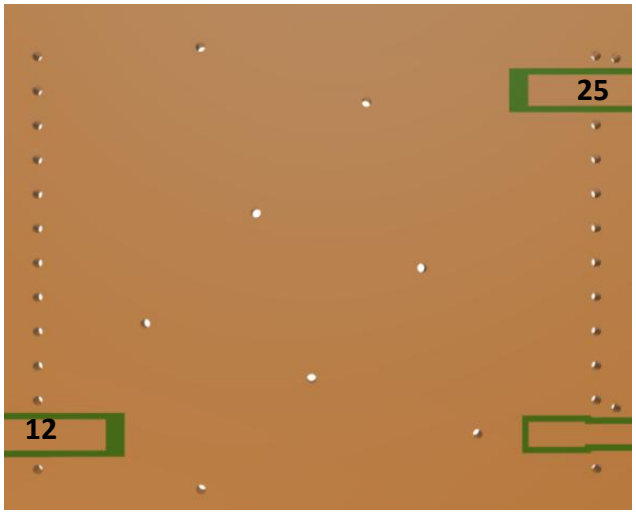

3D Image of Copper Clearance TFM.110A.

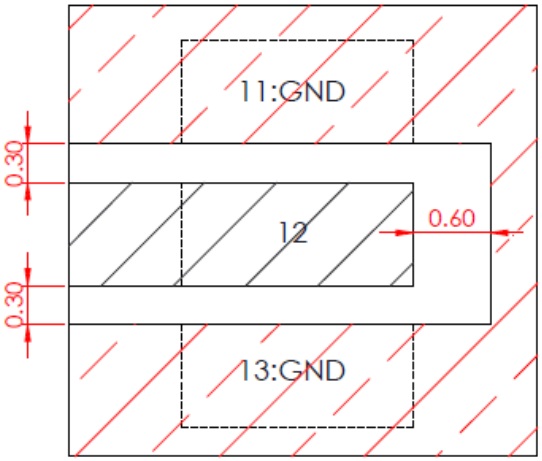

Copper Clearance for Pin 12 (RF OUT PAD) of the TFM.110A

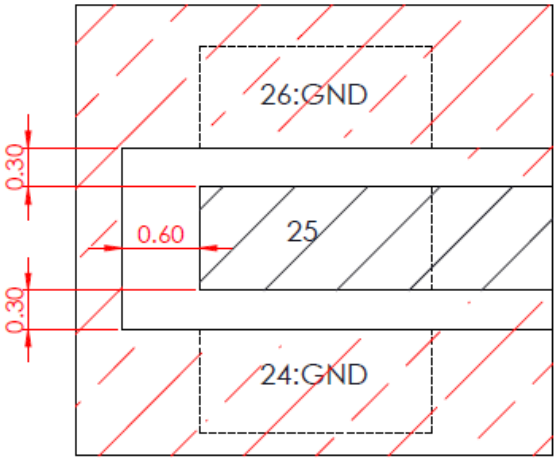

Copper Clearance for Pin 25 (L1/L2/L5 IN PAD) of the TFM.110A.

5.6 Final Integration

The bottom side image shown below highlights the antenna connection to the TFM.110A module. It demonstrates the output of the TFM.110A module that needs to be connected to a GNSS receiver input. It displays the DC connection required with ESD diode and decoupling capacitor. Taoglas recommends using a minimum of 70x70mm ground plane (PCB) to ensure optimal performance.

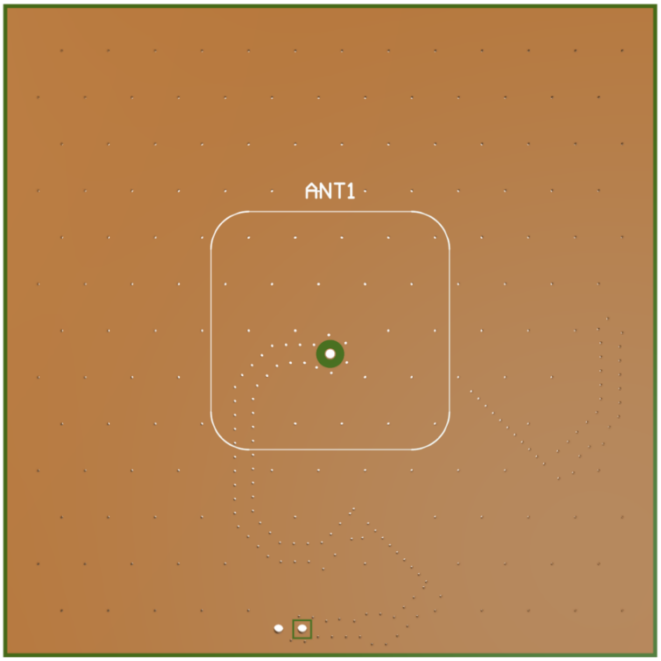

6. Solder Reflow Profile

The TFM.110A can be assembled by following the recommended soldering temperatures are as follows:

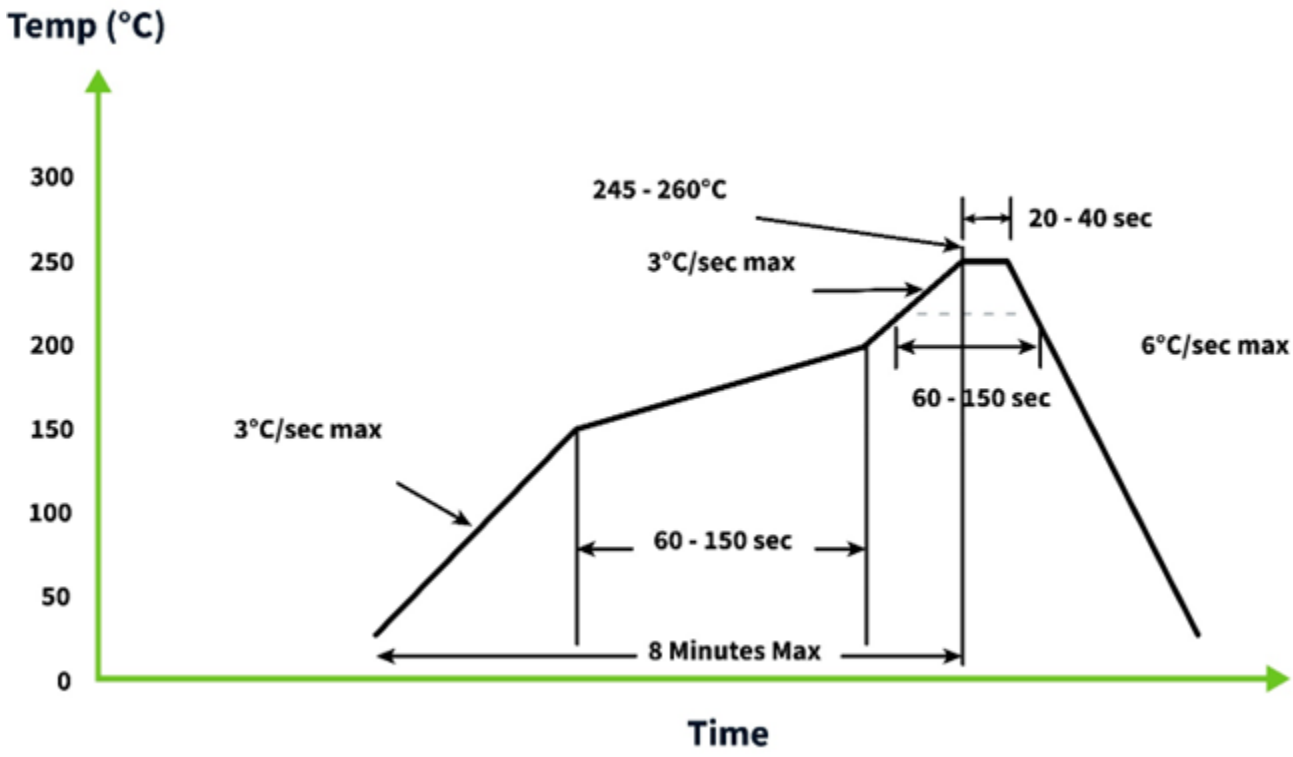

*Temperatures listed within a tolerance of +/- 10º C

Smaller components are typically mounted on the first pass, however, we do advise mounting the TFM.110A when placing larger components on the board during subsequent reflows.

7. Packaging

800 PCS / Reel
SPQ Label

800 PCS / Vacuum bag
2 PCS / 3g Desiccant
1 PCS / Humidity test paper
SPQ Label

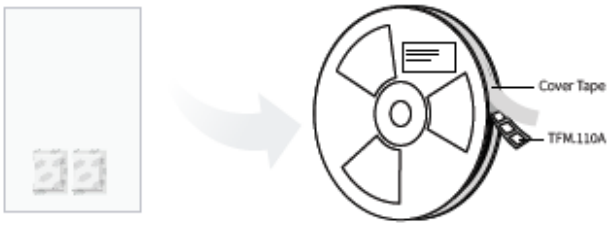

Caution Label
Product Label
SPQ Label

1 PCS / Box
Box(mm): 350x340x67
Weight (Kg): 2
SPQ Label

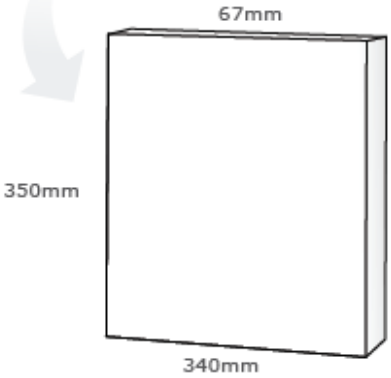

3200 PCS / Carton
Carton(mm): 370x360x305
Weight (Kg): 8.8
Carton Label

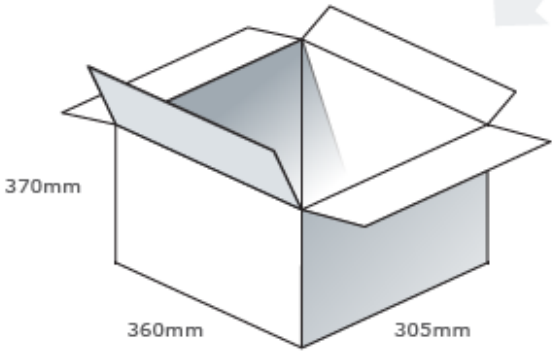

Changelog for the datasheet

SPE-22-8-149 – TFM.110.A

Revision: H (Current Version)	
Date:	2025-10-13
Notes:	Updated block diagram
Author:	Gary West

Previous Revisions

Revision: G	
Date:	2024-05-29
Notes:	Added moisture sensitivity level information to datasheet
Author:	Conor McGrath

Revision: B	
Date:	2022-10-28
Notes:	Added antenna integration guide
Author:	Gary West

Revision: F	
Date:	2024-03-12
Notes:	Updated GNSS table
Author:	Cesar Sousa

Revision: A (Original First Release)	
Date:	2022-09-26
Notes:	Initial Release
Author:	Gary West

Revision: E	
Date:	2023-08-18
Notes:	Updated module integration guide & ME Drawings
Author:	Gary West

Revision: D	
Date:	2023-08-18
Notes:	Added power consumption to spec table
Author:	Gary West

Revision: C	
Date:	2023-06-09
Notes:	Updated Module Integration Guide Added Packaging & Solder Reflow Profile
Author:	Gary West

TAOGLAS

TAOGLAS®

www.taoglas.com