TAOGLAS

Datasheet

Passive L1/L2 GNSS Antenna

Part No:
HP2258.A

Description

Passive L1/L2 GNSS Antenna

25mm Single Feed Stacked Patch

Features:

Pin Passive Patch Antenna

Bands Covered:

- GPS L1/L2,
- GLONASS G1/G2
- BeiDou B1
- Galileo E1

Dimensions: 25 x 25 x 8mm

Pin and Adhesive Mount

RoHS & Reach Compliant

1.	Introduction	2
2.	Specifications	3
3.	Mechanical Drawing	5
4.	Antenna Integration Guide	6
5.	Packaging	12
6.	Antenna Characteristics	13
7.	Radiation Patterns	16
	Changelog	22

Taoglas makes no warranties based on the accuracy or completeness of the contents of this document and reserves the right to make changes to specifications and product descriptions at any time without notice. Taoglas reserves all rights to this document and the information contained herein. Reproduction, use or disclosure to third parties without express permission is strictly prohibited.

Ireland & USA
ISO 9001:2015
Certified

Taiwan
ISO 9001:2015
Certified

IATF16949

1. Introduction

The Taoglas Accura HP2258.A, is a compact multi-band L1/L2 GNSS, high-performance directional antenna for high precision GPS and BeiDou accuracy and fast positioning. It utilizes a 25 x 25 x 8mm advanced wide-band dual stacked ceramic patch antenna with optimized gain for GPS L1/L2, Galileo, GLONASS and BeiDou bands.

Typical Applications Include:
- Wearables
- Transportation
- Navigation
- Security
- Autonomous Vehicles
- Precision Agriculture

The HP2258.A has been tuned and tested on a 70 x 70mm ground plane and exhibits excellent radiation patterns. The HP2258.A has been optimized to cover the bands required for the next generation of L1/L2 GNSS receivers that are currently on the market.

The HP2258.A has a compact size of 25 x 25 x 8mm allows it to be used in areas where larger patches won't fit, this makes it an excellent option for compact navigation devices.

Patch antennas can be specifically tuned to customer-specific device environments, subject to NRE and MOQ. Contact your regional Taoglas customer support team to request these services or additional support to integrate and test this antenna's performance in your device.

2. Specifications

GNSS Frequency Bands					
GPS	L1 1575.42 MHz	L2 1227.6 MHz	L5 1176.45 MHz		
	■	■	□		
GLONASS	G1 1602 MHz	G2 1248 MHz	G3 1207 MHz		
	■	■	□		
Galileo	E1 1575.24 MHz	E5a 1176.45 MHz	E5b 1201.5 MHz	E6 1278.75 MHz	
	■	□	□	□	
BeiDou	B1C 1575.42 MHz	B1I 1561 MHz	B2a 1176.45 MHz	B2b 1207.14 MHz	B3 1268.52 MHz
	■	■	□	□	□
QZSS (Regional)	L1 1575.42 MHz	L2C 1227.6 MHz	L5 1176.45 MHz	L6 1278.75e6	
	■	■	□	□	
IRNSS (Regional)	L5 1176.45 MHz				
	□				
SBAS	L1/E1/B1 1575.42 MHz	L5/B2a/E5a 1176.45 MHz	G1 1602 MHz	G2 1248 MHz	G3 1207 MHz
	■	□	■	■	□

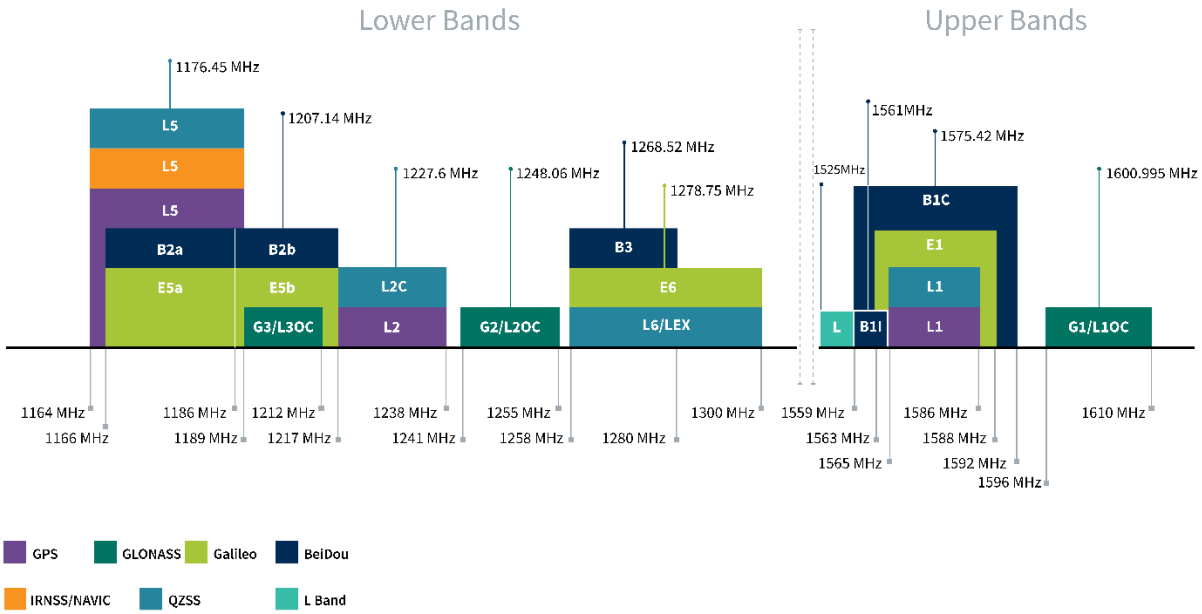

GNSS Electrical					
Frequency (MHz)	GPS L2	GLONASS_G2	BeiDou_B1	GPS_L1	GLONASS_G1
	1217-1237	1241-1258	1559-1563	1563-1587	1569-1610
Efficiency (%)					
70x70 GND	47.9	49.6	44.5	56.5	56.2
Average Gain (dB)					
70x70 GND	-3.20	-3.04	-3.52	-2.48	-2.51
Peak Gain (dBi)					
70x70 GND	3.08	3.08	1.40	2.56	3.44
Impedance	50 Ω				
Polarization	RHCP				
Radiation Pattern	Directional				
***Tested on 70 x 70 mm ground plane**					

Mechanical	
Dimensions	25 x 25 x 8mm
Weight	18g
Material	Ceramic
Connector	Pin & Adhesive Mount
Environmental	
Temperature Range	-40°C to 85°C
Humidity	Non-condensing 65°C 95% RH

3. Mechanical Drawing

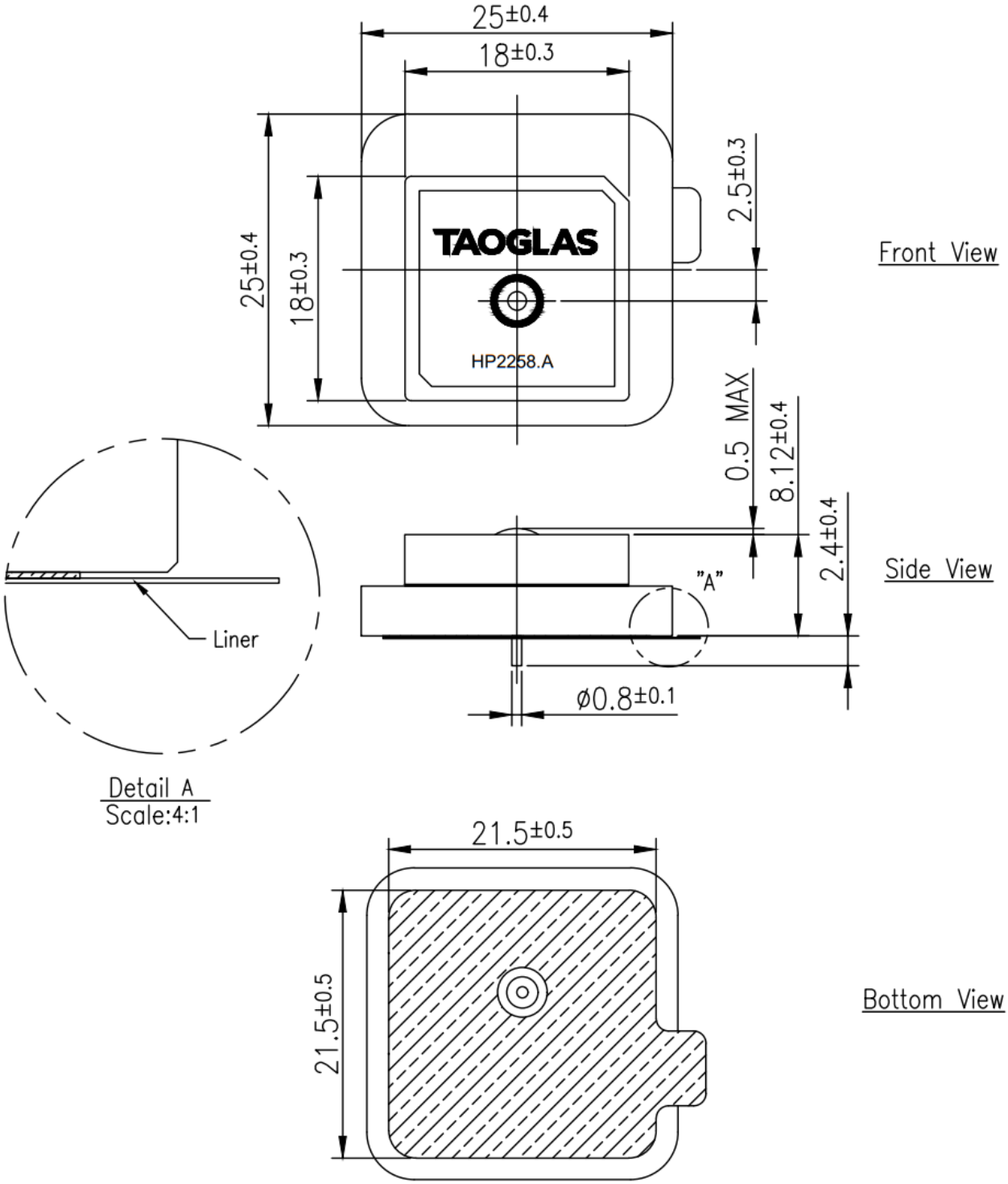

	Name	Material	Finish	QTY
1	Patch(18*18*4)	Ceramic	Clear	1
2	Patch(25*25*4)	Ceramic	Clear	1

4. Antenna Integration Guide

The following is an example on how to integrate the HP2258.A into a design. The HP2258.A has one pin which is used for the RF Feed. Taoglas recommends using a minimum of 70x70mm ground plane to ensure optimal performance.

Top view of an example 70x70mm PCB Reference Design.

Please find the Integration files in Altium, 2D formats and the 3D model for the HP2258.A here: https://www.taoglas.com/product/compact-multi-band-l1-l2-gnss-patch-antenna-25x25mm/

4.1 Schematic Symbol and Pin Definitions

Top and Bottom view of an example 70x70mm PCB Reference Design.

The circuit symbol for a HP2258.A is shown below. The antenna has 1 pin as indicated below.

Pin	Description
1	RF Feed

4.2 Antenna Footprint

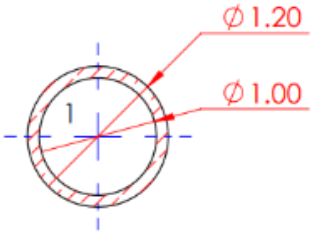

TOP

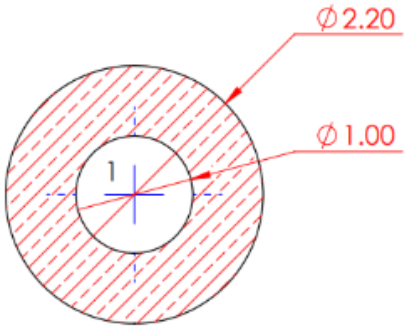

BOTTOM

4.3 Copper Clearance

The footprint and clearance on the PCB must comply with the antenna's specification. The PCB layout shown in the diagrams below demonstrates the HP2258.A clearance area for Pin 1 (RF Feed Pad). The bottom copper keep out area only applies to the bottom layer and the top copper keep out area applies to all other layers. There should be a Ø3mm copper clearance around the antenna pins on the top side of the PCB with a Ø3.5mm copper clearance around the antenna pins on the bottom side.

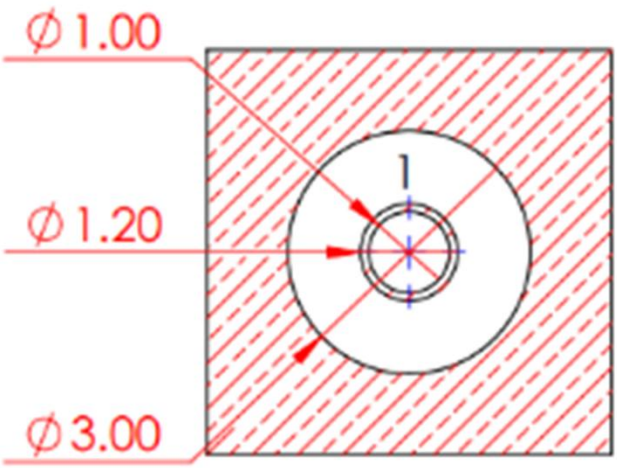

TOP

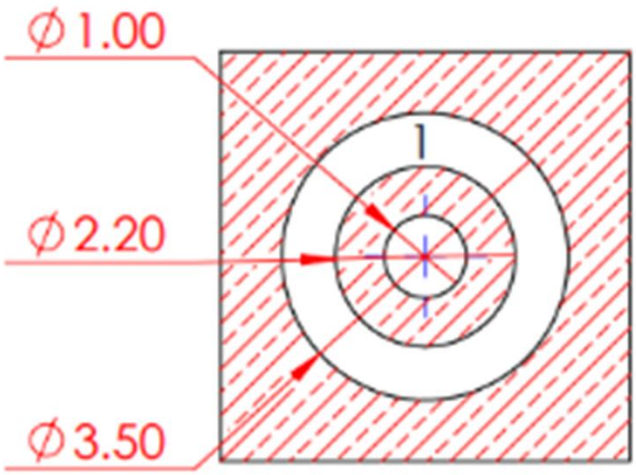

BOTTOM

4.4 Antenna Integration

The HP2258.A should be placed in the centre of the PCB to take advantage of the ground plane. The RF traces must maintain a 50 Ohm transmission line. Ground vias should be placed around the copper clearance area and the transmission line. Note that depending on the design application, tuning may be required for optimal performance. This may be achieved using a 'pi' matching network or custom tuning of the patch antenna.

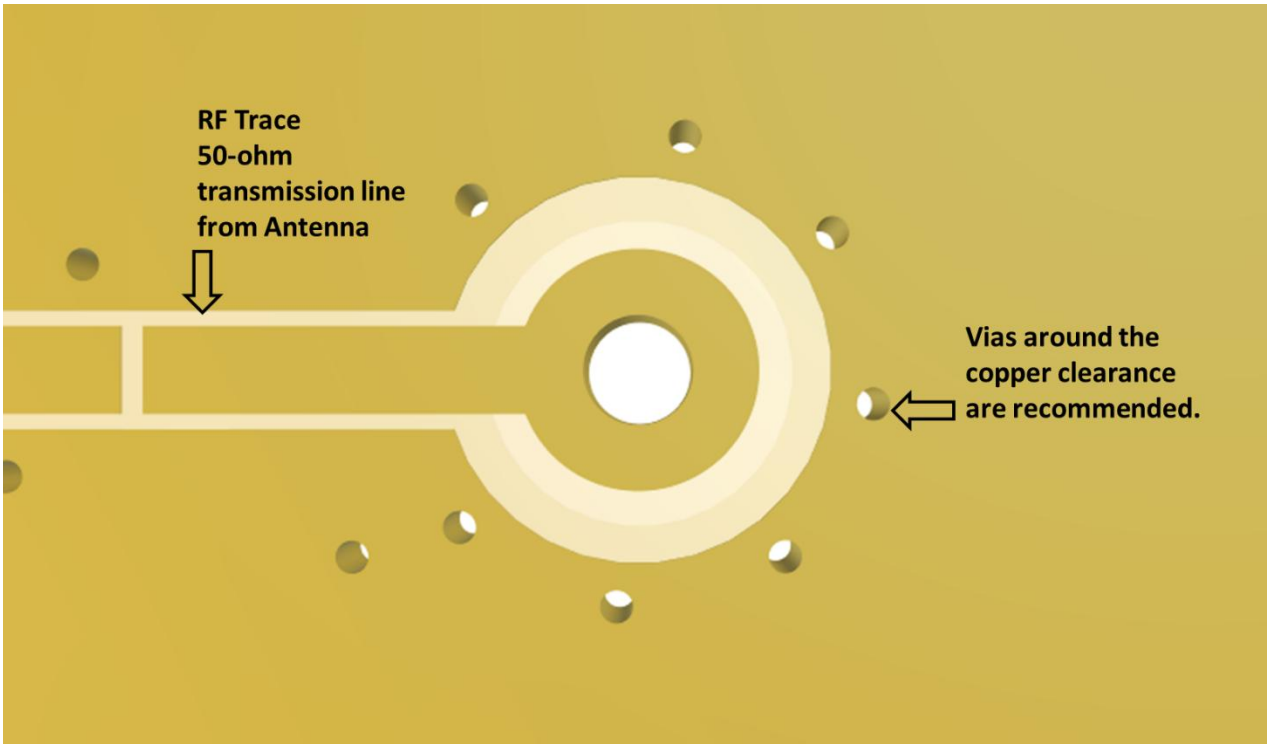

Bottom view of the PCB Reference Design, showing transmission lines and integration notes.

4.5 Final Integration

The bottom side image shown below highlights the antenna transmission line. Taoglas recommends using a minimum of 70x70mm ground plane to ensure optimal performance.

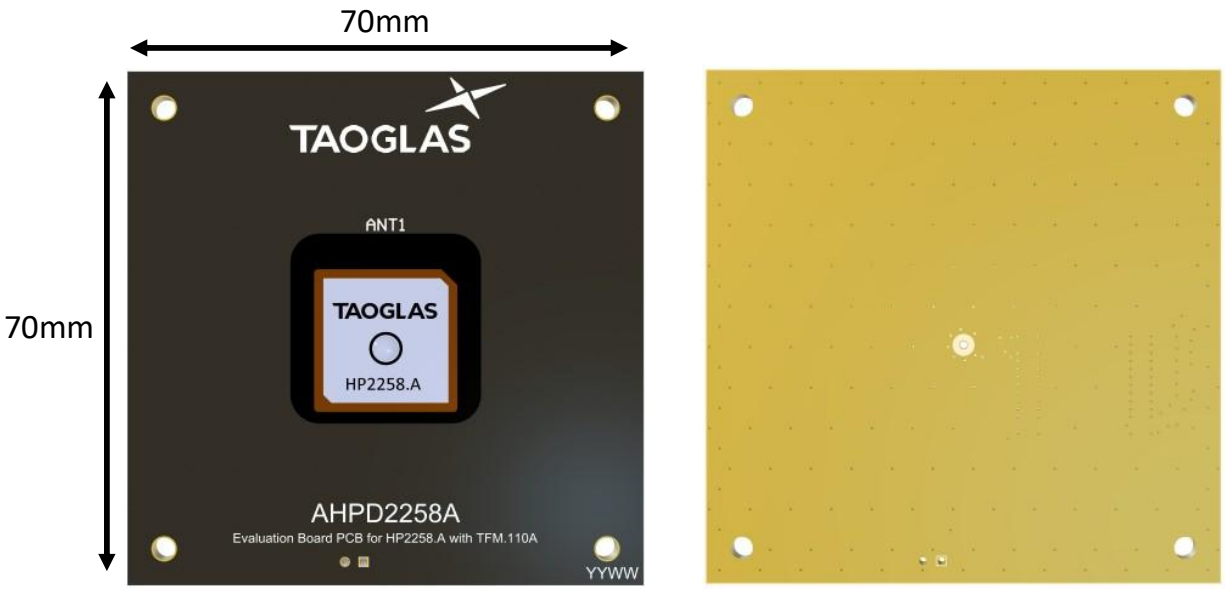

Top Side (70x70mm example PCB Reference Design)

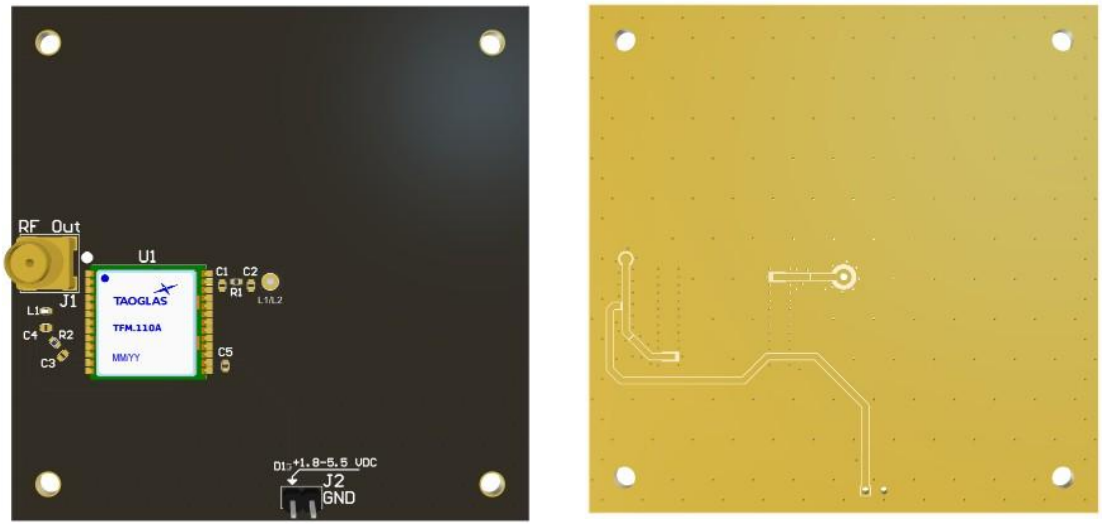

Bottom Side

5. Packaging

24pcs HP2258.A per Tray

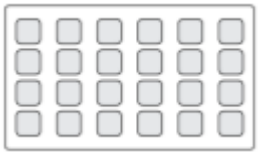

96pcs HP2258.A per Inner Carton
Dimensions: 263*154*96 mm

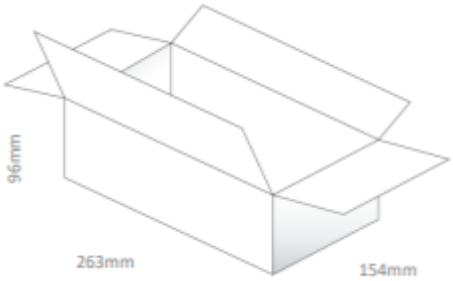

384pcs HP2258.A per Inner Carton Dimensions:
327*280*218 mm

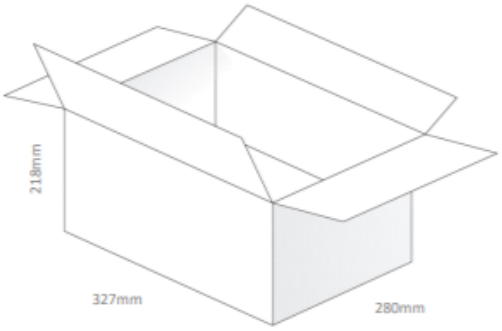

6. Antenna Characteristics

6.1 Return Loss

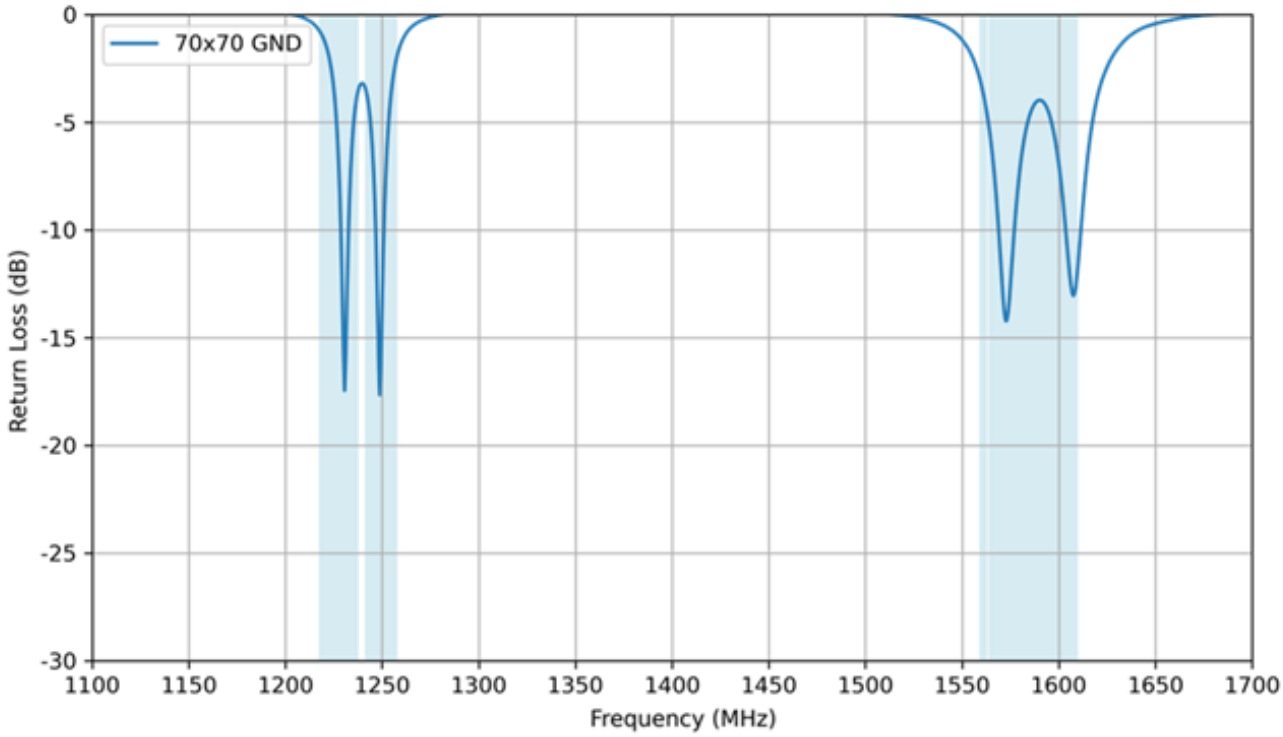

6.2 VSWR

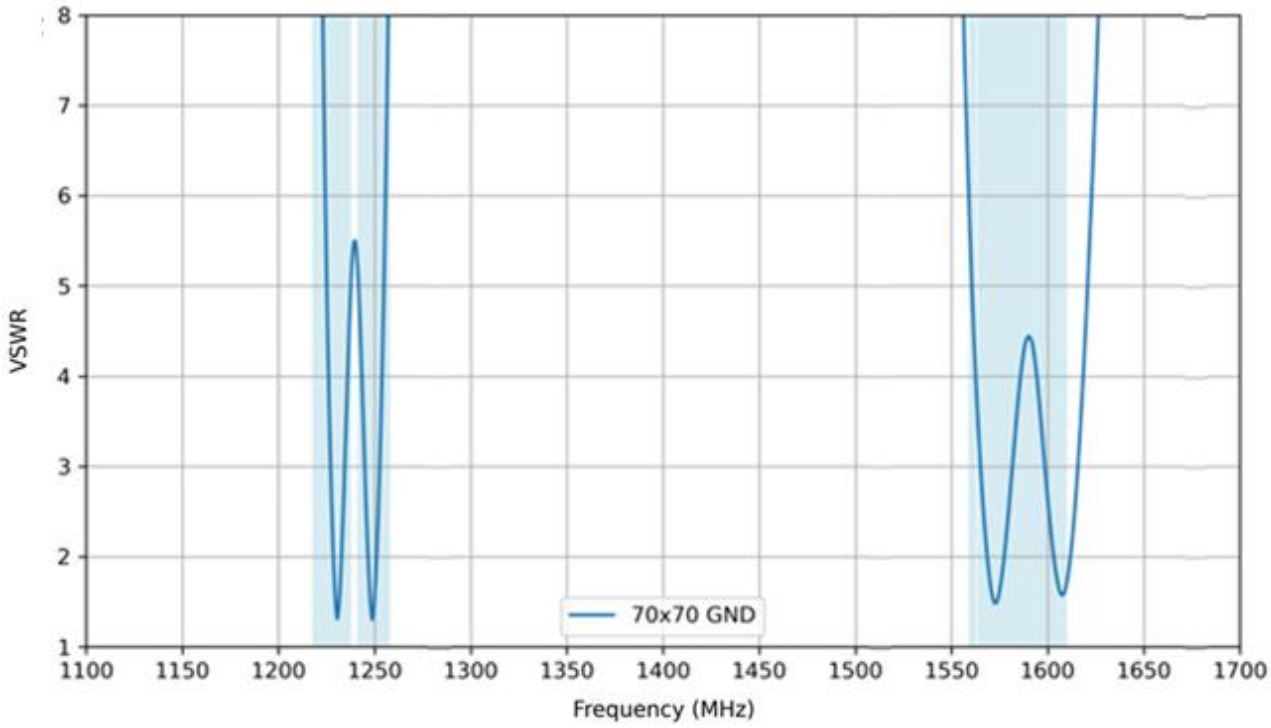

6.3 Efficiency

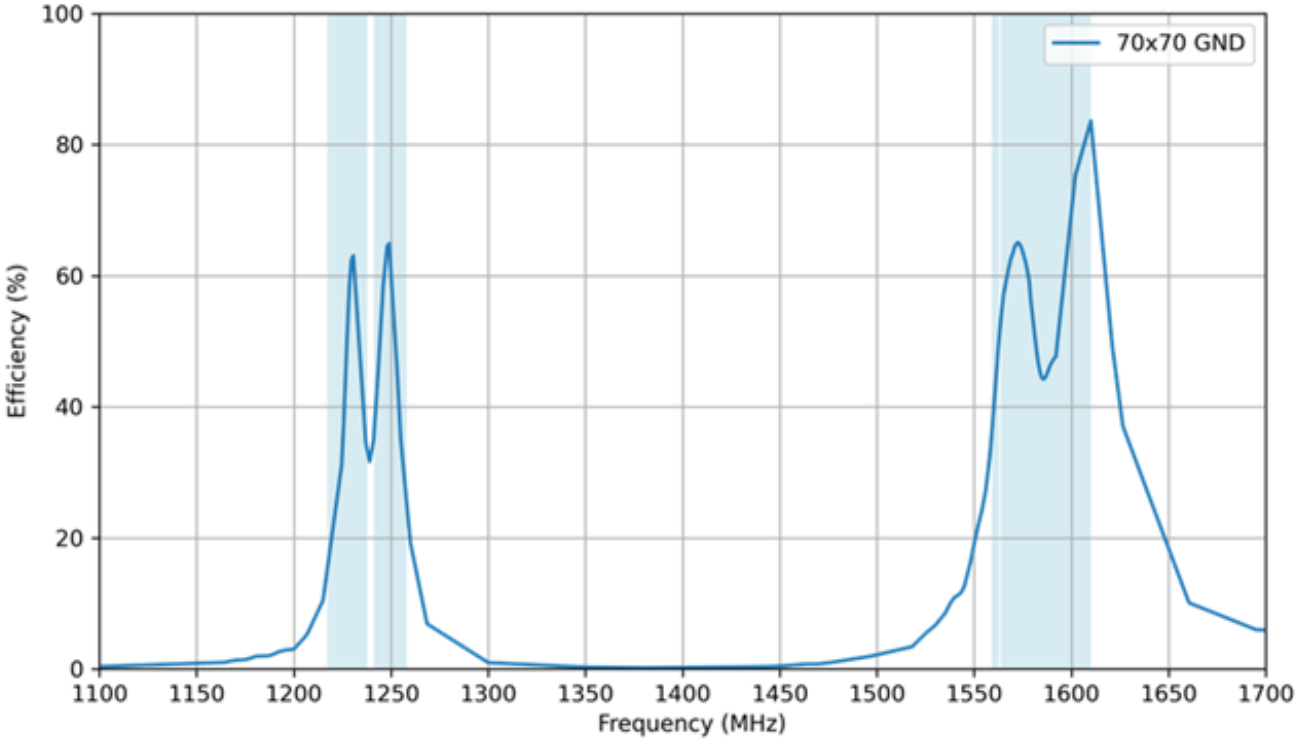

6.4 Average Gain

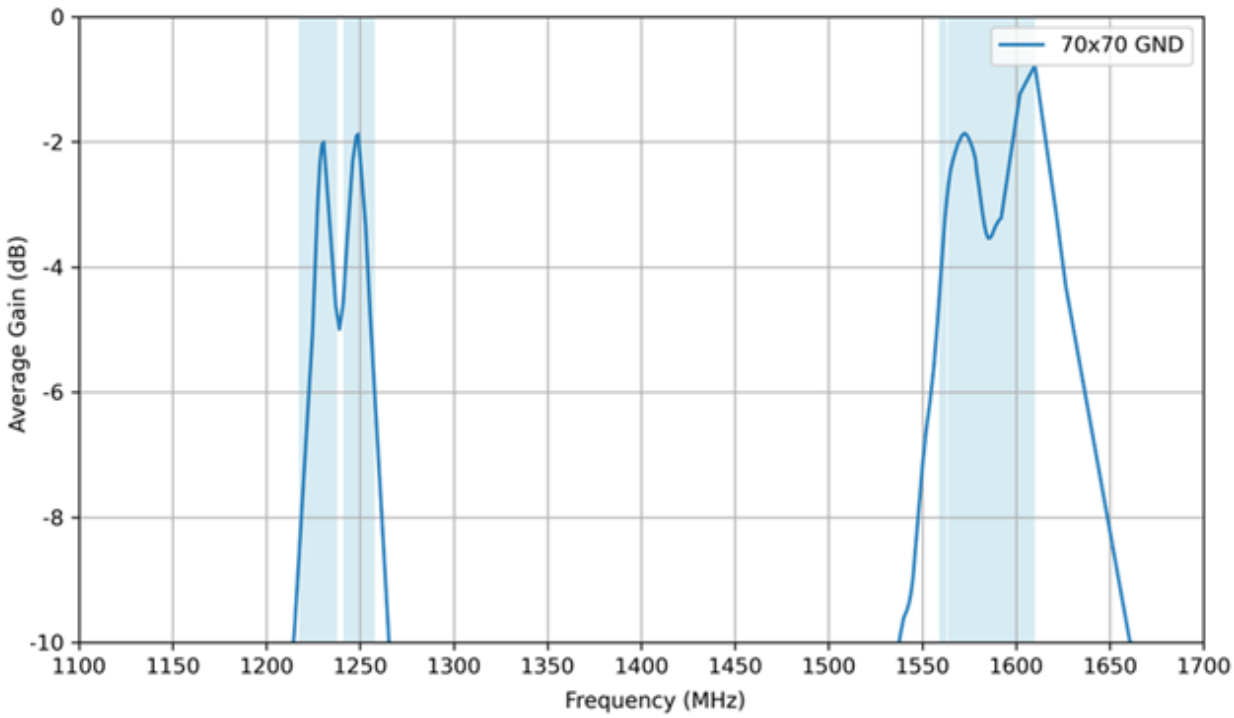

6.5 Peak Gain

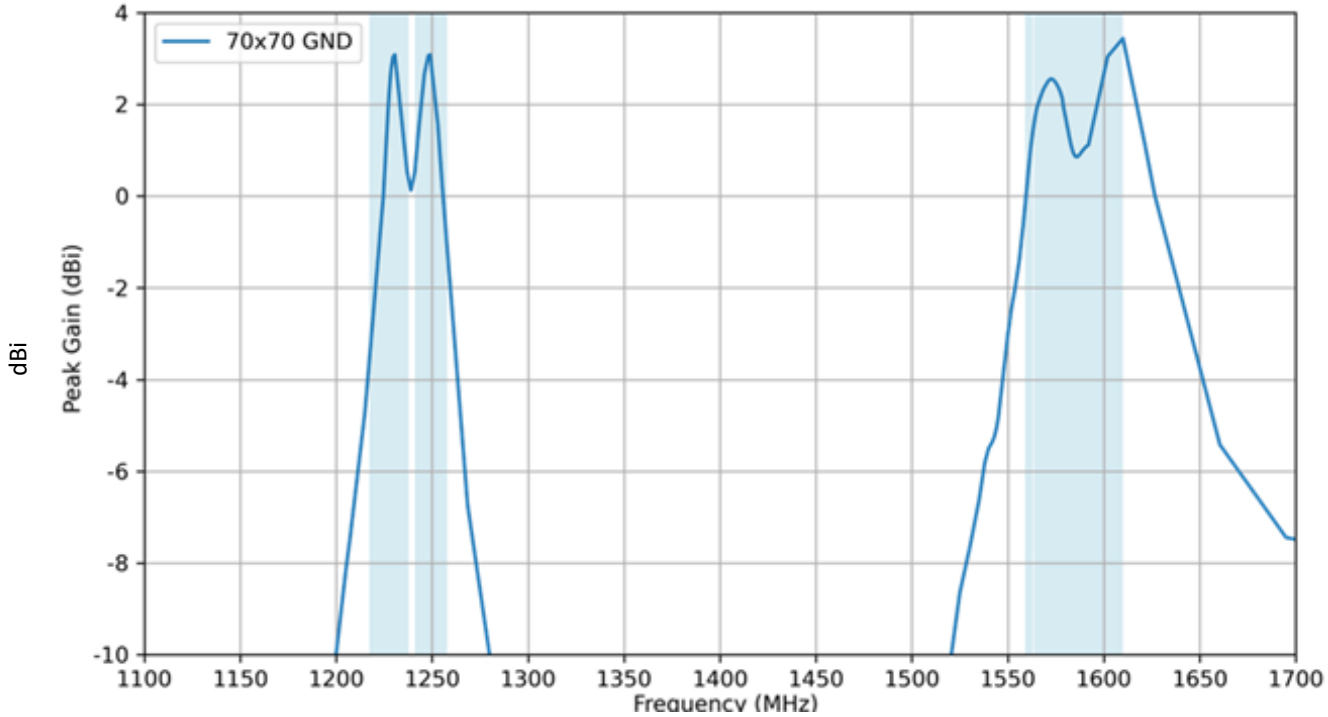
70x70 GND
Peak Gain (dBi)
dBi
4
2
0
-2
-4
-6
-8
-10
1100
1150
1200
1250
1300
1350
1400
1450
1500
1550
1600
1650
1700
Frequency (MHz)

7. Radiation Patterns

7.1 Test Setup

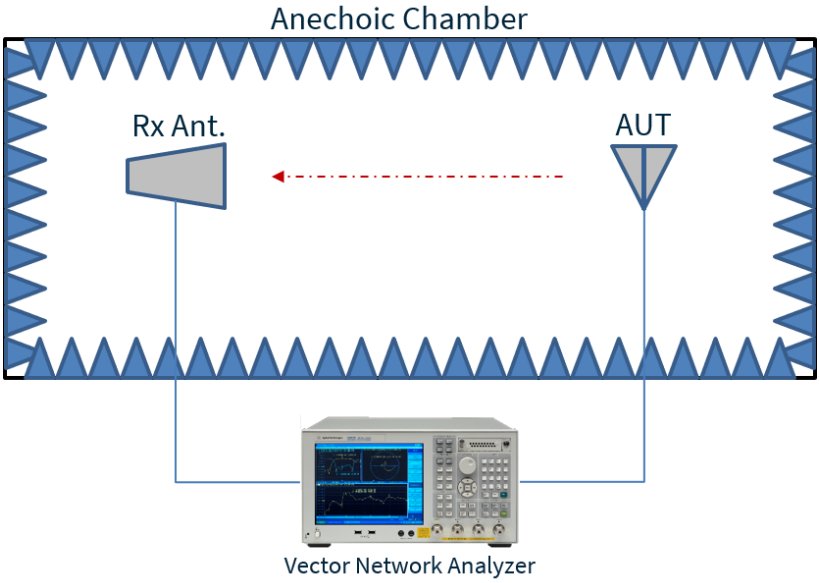

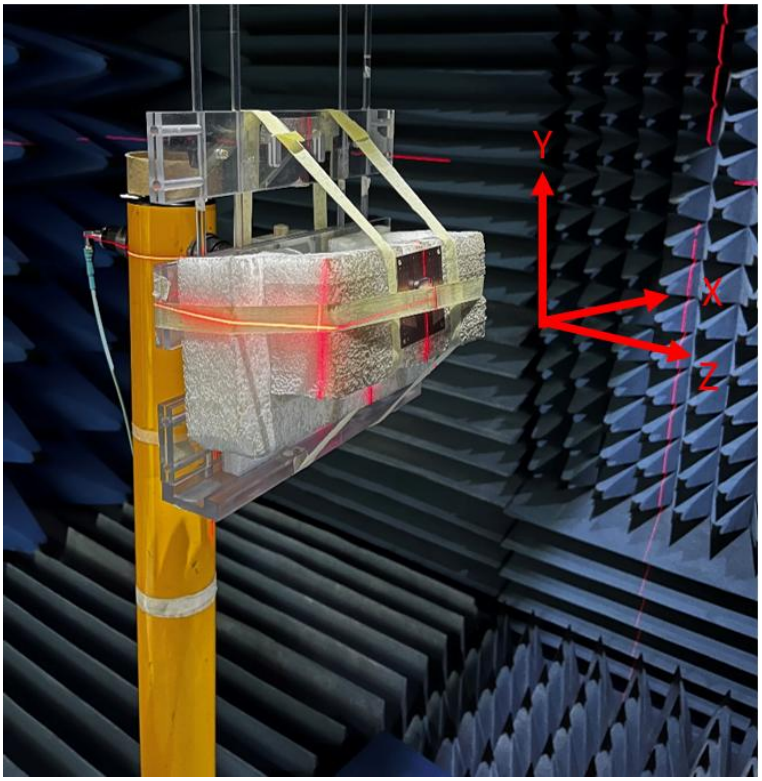

Chamber Test Set-up

7.2 Patterns at 1227 MHz

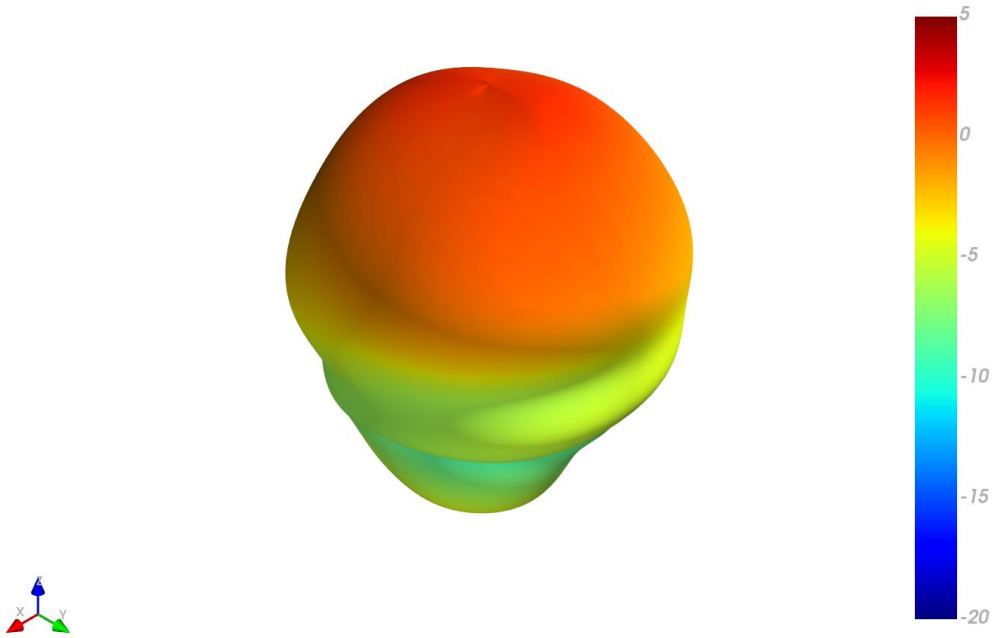

XZ Plane	YZ Plane	XY Plane

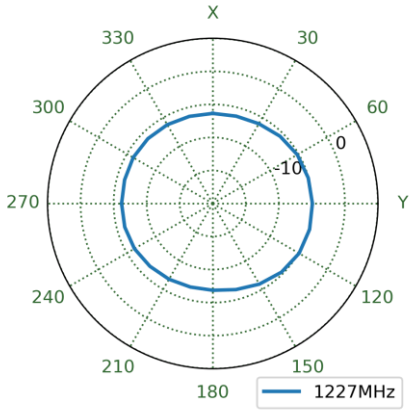

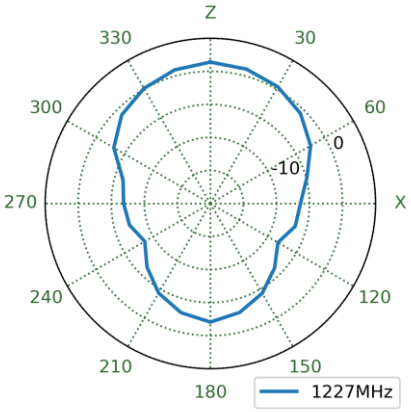

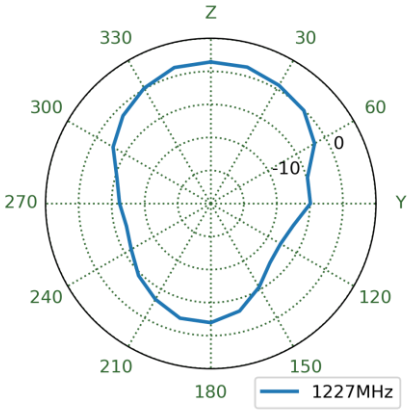

7.3 Patterns at 1248 MHz

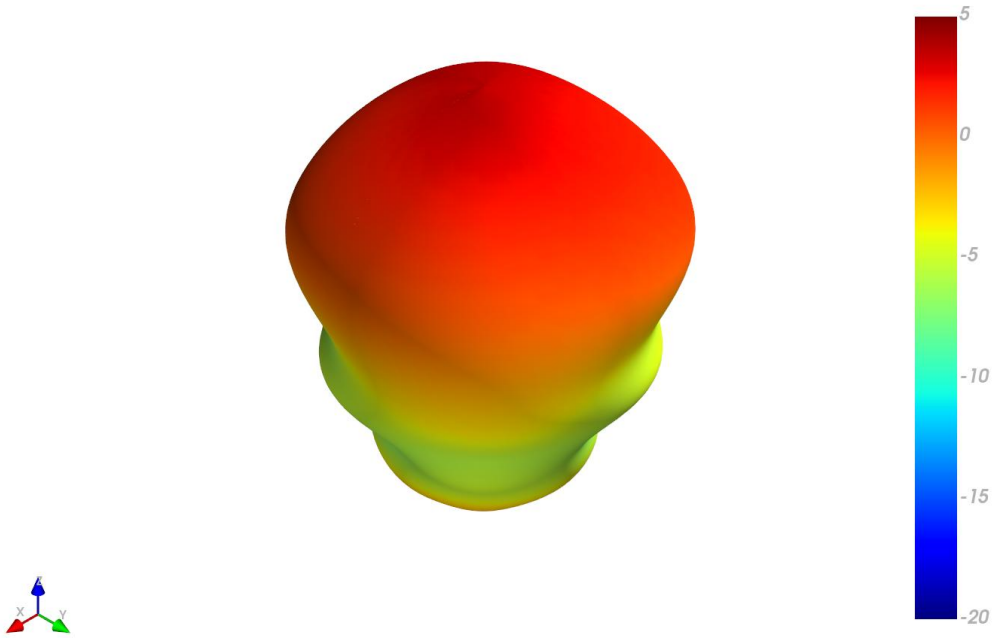

XZ Plane	YZ Plane	XY Plane

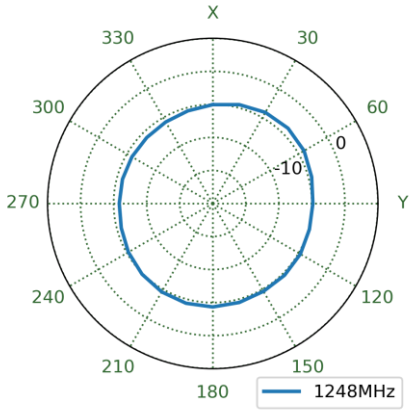

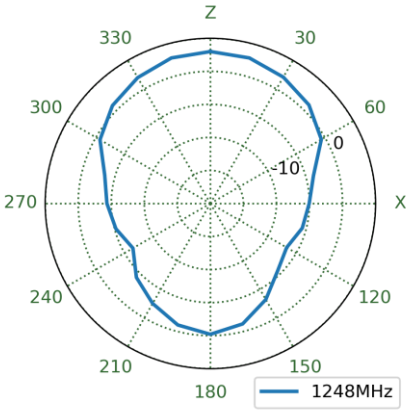

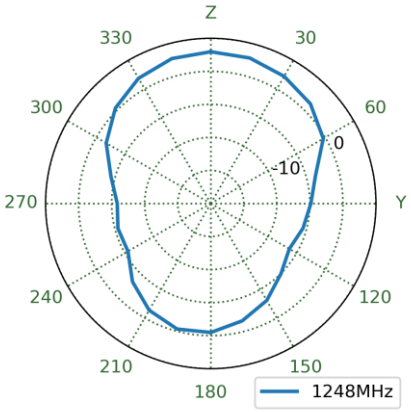

7.4 Patterns at 1561 MHz

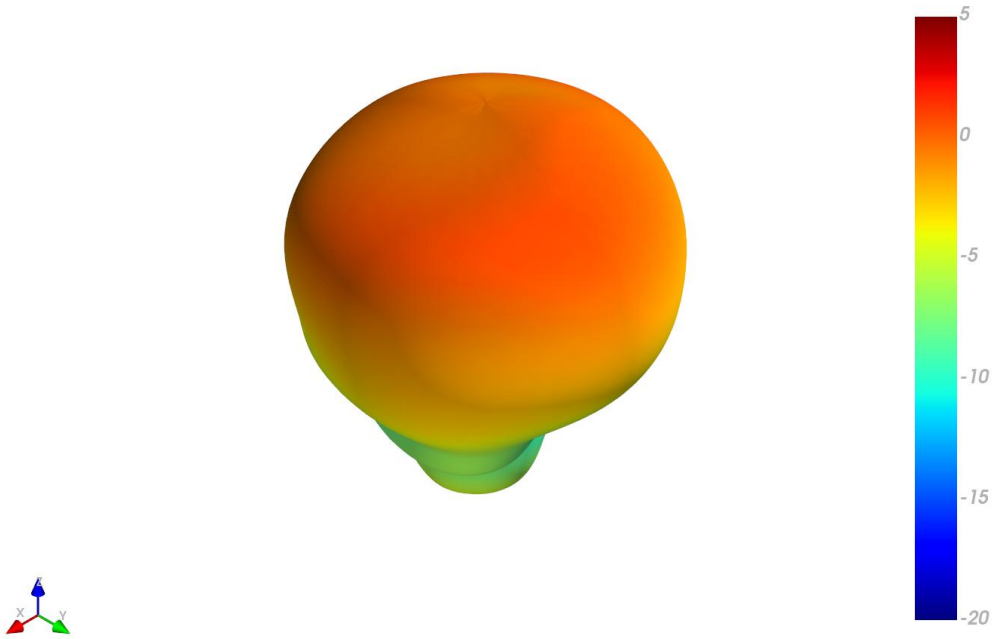

XZ Plane	YZ Plane	XY Plane

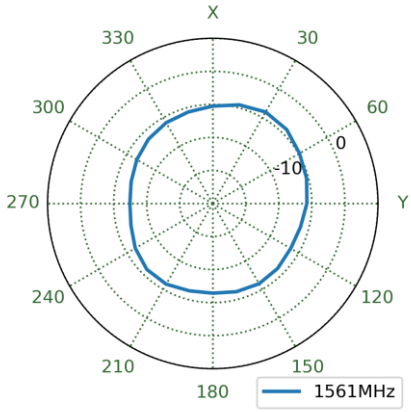

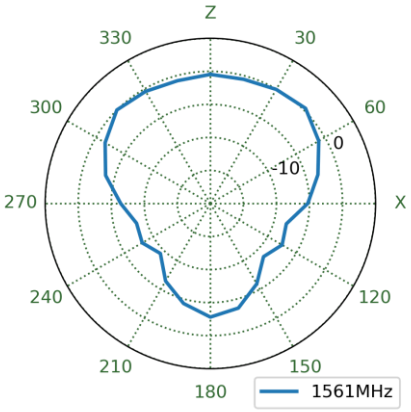

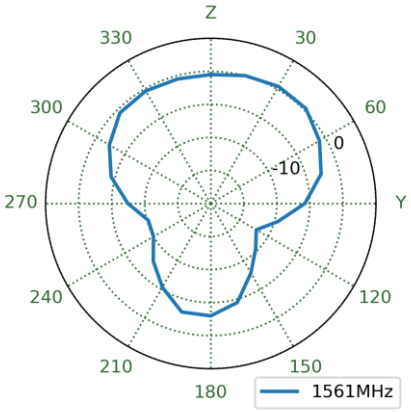

7.5 Patterns at 1575 MHz

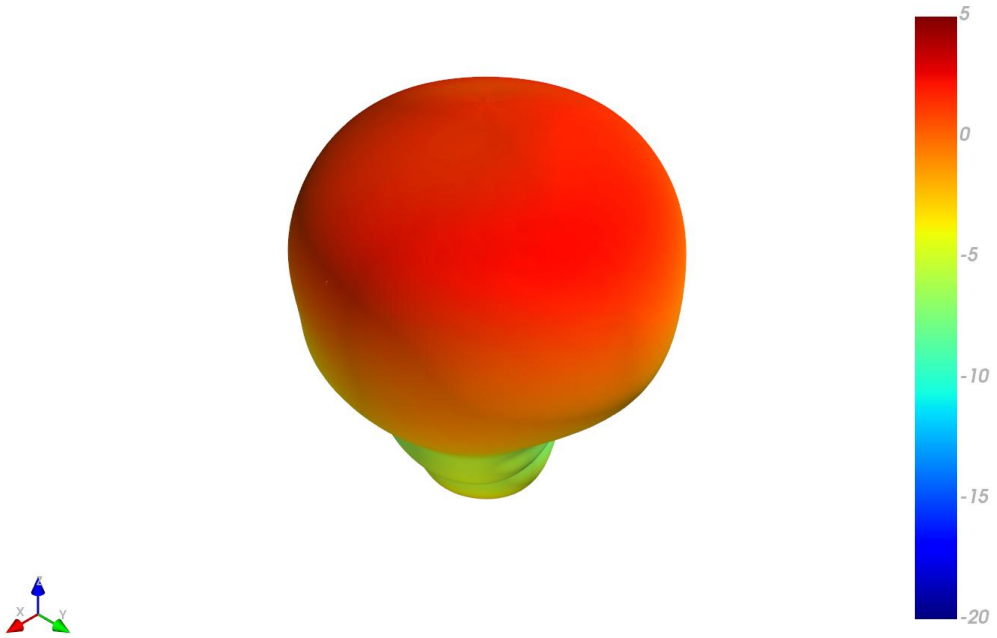

XZ Plane	YZ Plane	XY Plane

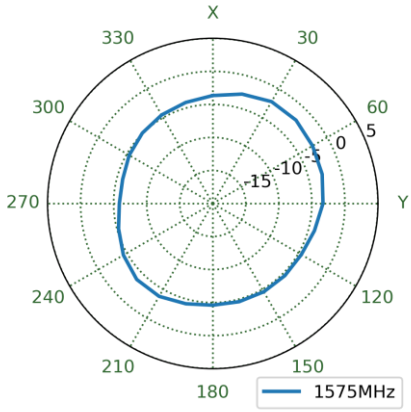

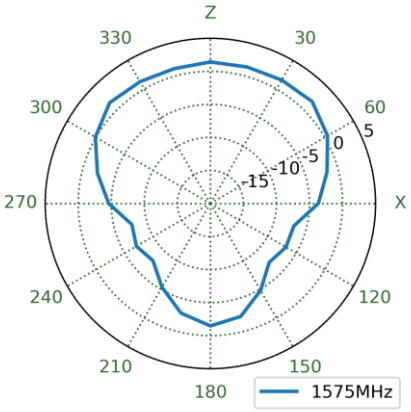

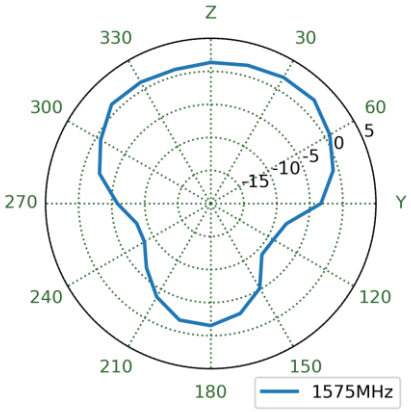

7.6 Patterns at 1602 MHz

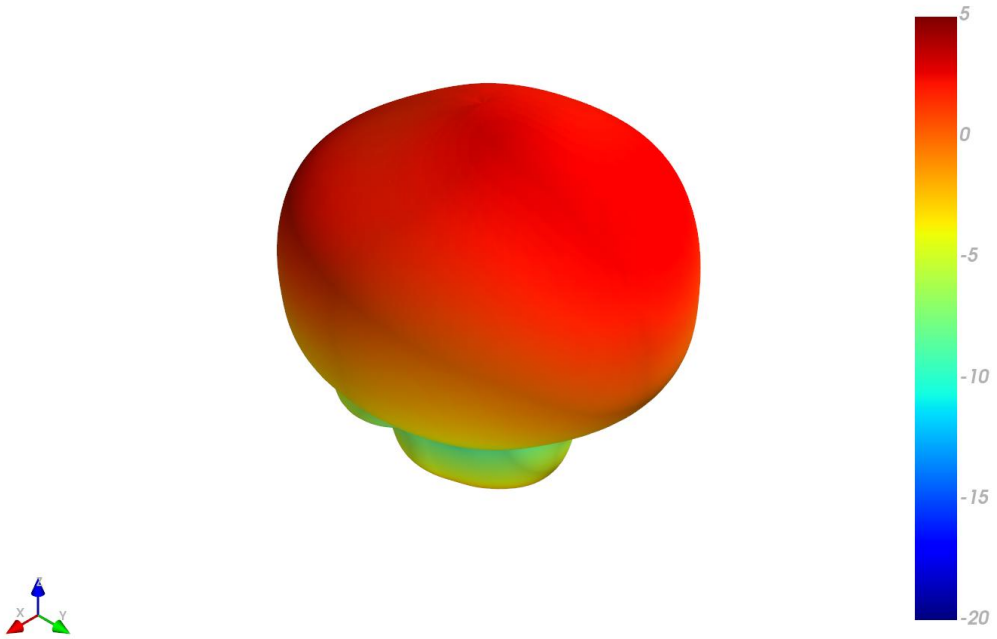

XZ Plane	YZ Plane	XY Plane

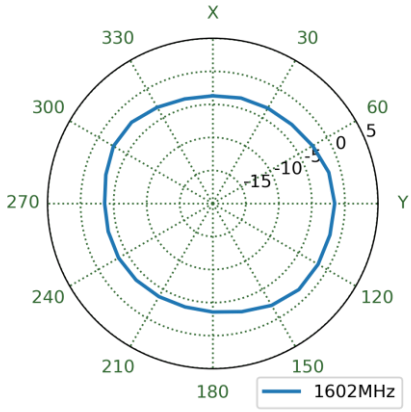

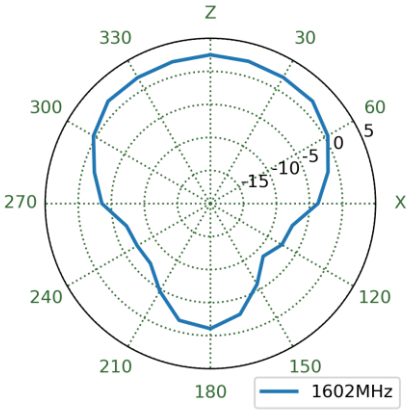

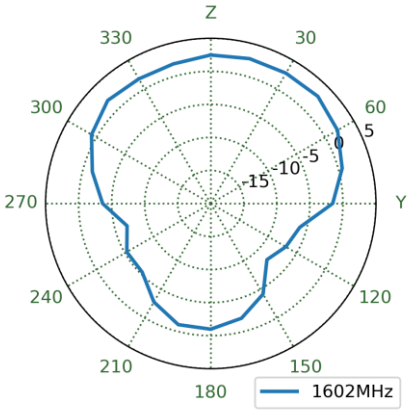

Changelog for the datasheet

SPE-23-8-248 – HP2258.A

Revision: C (Current Version)	
Date:	2026-01-12
Changes:	Updated product image and integration guide.
Changes Made by:	Gary West

Previous Revisions

Revision: B	
Date:	2025-07-02
Changes:	Added Antenna Integration Guide
Changes Made by:	Gary West

Revision: A (Original First Release)	
Date:	2023-09-12
Notes:	Initial Release
Author:	Cesar Sousa

TAOGLAS

TAOGLAS®

www.taoglas.com