TAOGLAS

Datasheet

GPS/GLONASS/BeiDou Patch

Part No:
CGGBP.35.2.A.08

Description

35 x 35 x 2mm GPS/GLONASS/Galileo/BeiDou/QZSS

Ceramic Patch Antenna

Features:

Stable gain across most major GNSS applications
Excellent radiation pattern coverage
Low profile
Dielectric Ceramic
Pin (Through hole) Mount
Dims: 35 x 35 x 2mm
RoHS & Reach Compliant

1.	Introduction	2
2.	Specification	3
3.	Mechanical Drawing	5
4.	Antenna Integration Guide	6
5.	Packaging	12
6.	Antenna Characteristics	13
7.	Radiation Patterns	17
	Changelog	21

Taoglas makes no warranties based on the accuracy or completeness of the contents of this document and reserves the right to make changes to specifications and product descriptions at any time without notice. Taoglas reserves all rights to this document and the information contained herein. Reproduction, use or disclosure to third parties without express permission is strictly prohibited.

Ireland & USA
ISO 9001:2015
Certified

Taiwan
ISO 9001:2015
Certified

1. Introduction

This **CGGBP.35** 35mm x 35mm embedded ceramic GPS/GLONASS/Galileo/ BeiDou patch antenna has a wide band of operation, leading to excellent gain and radiation pattern stability on all three GNSS system bands. The CGGBP.35.2 is ideal for devices where height may be at a premium, at just 2mm this low profile patch antenna can be placed in areas where thicker antennas may not fit.

Typical Applications Include:

- Wearables
- Navigation
- Transportation
- RTK

Compared to using a smaller antenna, this will translate into the GNSS system having much higher location accuracy, improved reliability of lock in urban areas, better signal reception, with more satellites acquired and a quicker time to first fix.

The patch is mounted via pin and double-sided adhesive. This antenna has been manufactured in an IATF16969 approved facility.

While the antenna will operate well in most device environments (Note cannot be covered with metal enclosure), tuning and further optimization of this antenna to different ground-planes and enclosures can be done if required, also including a pin length change. These changes would be subject to possible NRE and a minimum order quantity. For further information contact your regional Taoglas customer support team

2. Specification

GNSS Frequency Bands					
GPS	L1 1575.42 MHz	L2 1227.6 MHz	L5 1176.45 MHz		
	■	□	□		
GLONASS	G1 1602 MHz	G2 1248 MHz	G3 1207 MHz		
	■	□	□		
Galileo	E1 1575.24 MHz	E5a 1176.45 MHz	E5b 1201.5 MHz	E6 1278.75 MHz	
	■	□	□	□	
BeiDou	B1C 1575.42 MHz	B1I 1561 MHz	B2a 1176.45 MHz	B2b 1207.14 MHz	B3 1268.52 MHz
	■	■	□	□	□
L-Band	L-Band 1542 MHz				
	■				
QZSS (Regional)	L1 1575.42 MHz	L2C 1227.6 MHz	L5 1176.45 MHz	L6 1278.75e6	
	■	□	□	□	
IRNSS (Regional)	L5 1176.45 MHz				
	□				
SBAS	L1/E1/B1 1575.42 MHz	L5/B2a/E5a 1176.45 MHz	G1 1602 MHz	G2 1248 MHz	G3 1207 MHz
	■	□	■	□	□

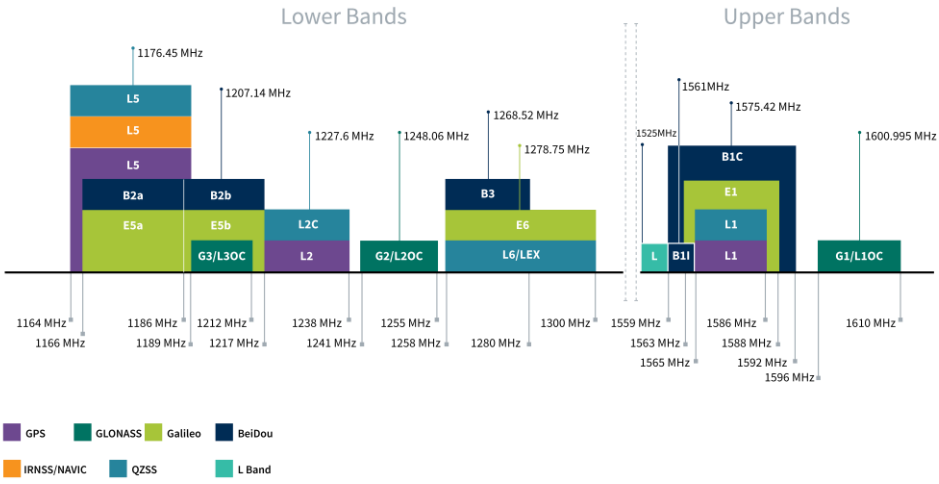

GNSS Bands and Constellations

GNSS Electrical			
Frequency (MHz)	**1561**	**1575.42**	**1603**
VSWR (max.)	2:1	3:1	2:1
Efficiency (%)	72.73	68.2	72.92
Peak Gain (dBi)	4.2	4.3	4.55
Polarization	RHCP		
Impedance	50 Ω		

Mechanical	
Dimensions	35 x 35 x 2mm
Weight	8.6g
Material	Ceramic

Environmental	
Operation Temperature	40°C to 85°C
Storage Temperature	-40°C to 105°C
Relative Humidity	Non-condensing 65°C 95% RH

3. Mechanical Drawing

Top

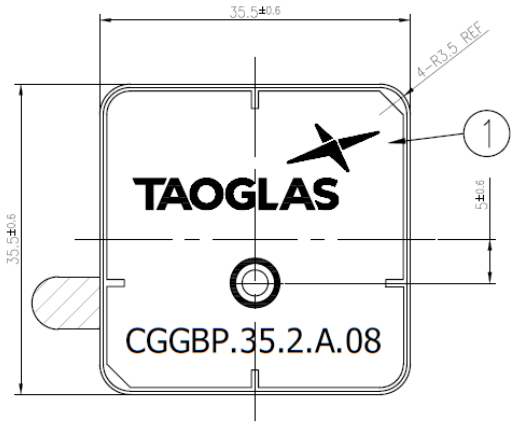

Side

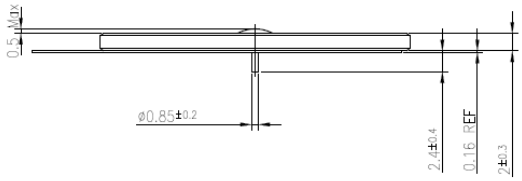

Bottom

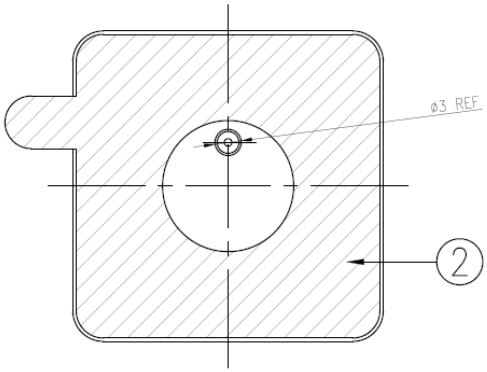

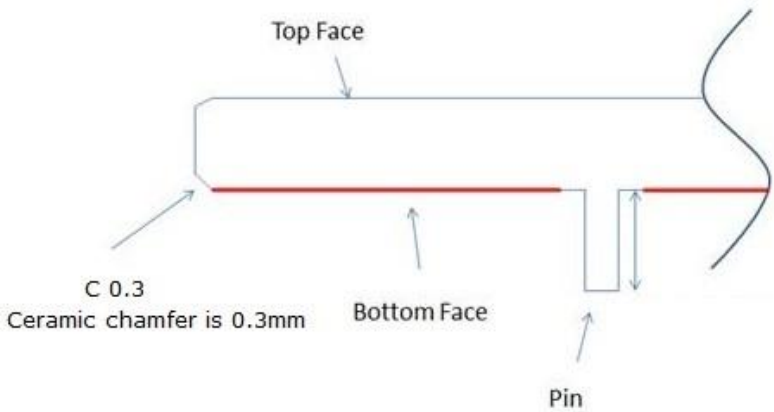

Red Line shows the adhesive without Liner - thickness 0.08~0.1mm

4. Antenna Integration Guide

The following is an example on how to integrate the CGGBP.35.2.A.08 into a design. This antenna has one pin, which is used for the RF Feed. Taoglas recommends using a minimum of 70x70mm ground plane (PCB) to ensure optimal performance.

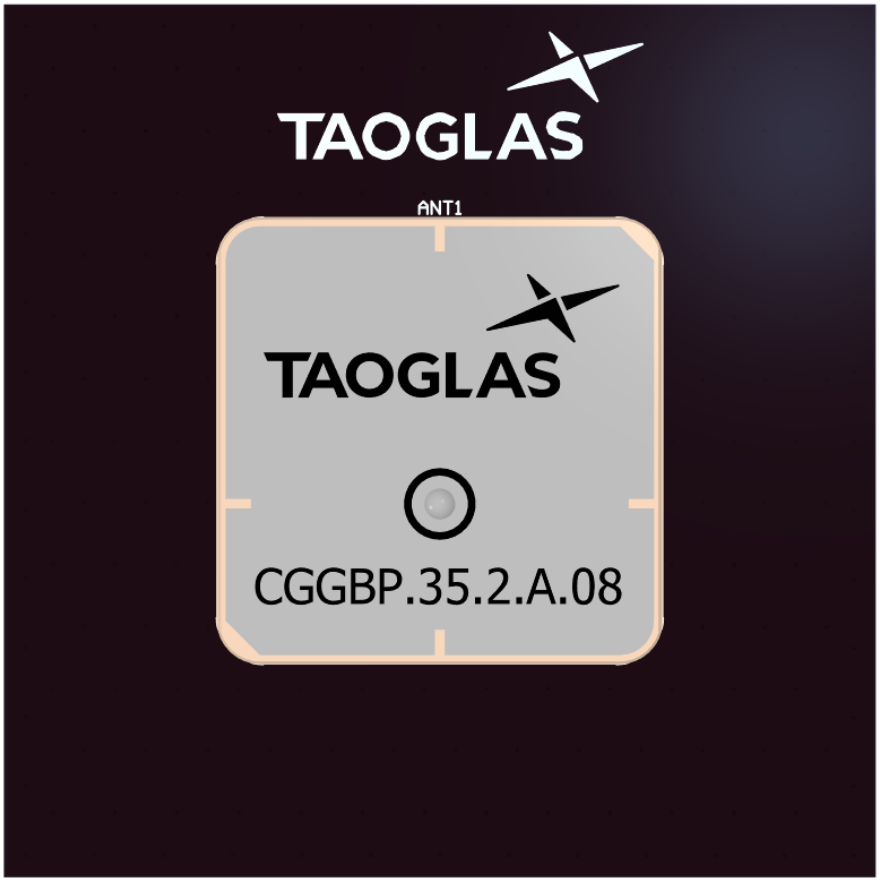

Top view of PCB reference design

Please find the Integration files in Altium, 2D formats and the 3D model for the CGGBP.35.2.A.08 here:
https://www.taoglas.com/product/35352mm-cggbp-35-2-08-gpsglonassgalileobeidou-l1-embedded-patch-antenna/

4.1 Schematic and Symbol Definition

The circuit symbol for the CGGBP.35.2.A.08 is shown below. The antenna has 1 pin as indicated below.

Pin	Description
1	RF Feed

Above is a schematic symbol of CGGBP.35.2.A.08 and a table of the pin definitions.

4.2 Footprint

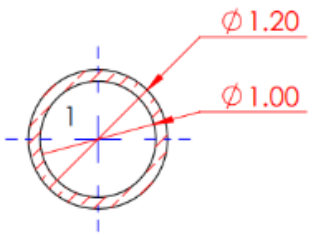

Top

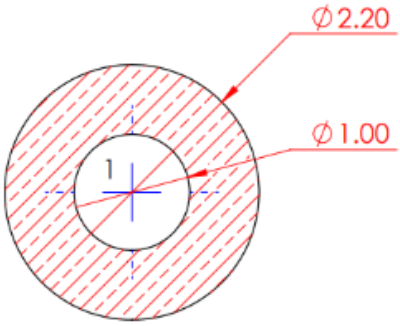

Bottom

Pin	Description
1	RF Feed

4.3 Copper Clearance

The footprint and clearance on the PCB must comply with the antenna's specification. The PCB layout shown in the diagrams below demonstrates the CGGBP.35.2.A.08 clearance area for Pin 1 (RF Feed Pad). The bottom copper keep out area only applies to the bottom layer and the top copper keep out area applies to all other layers.

There should be a Ø3mm copper clearance around the antenna pins on the top side of the PCB with a Ø3.5mm copper clearance around the antenna pins on the bottom side.

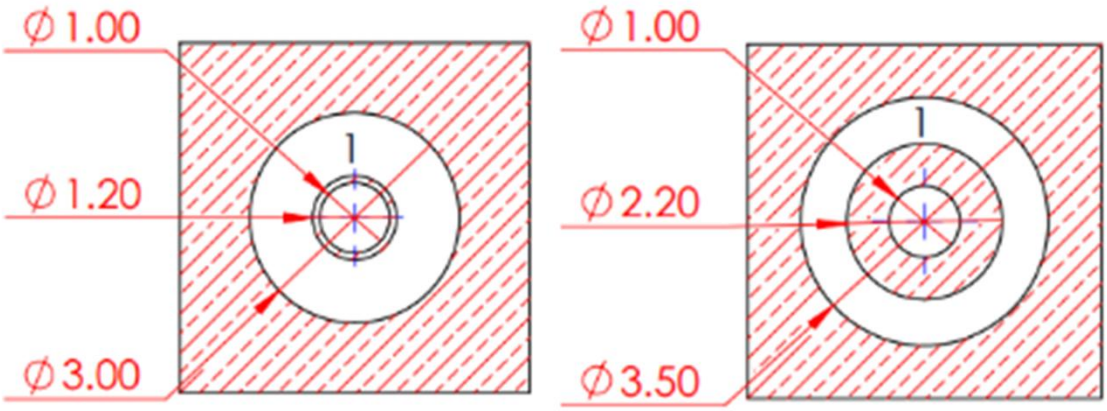

Top

Bottom

4.4 Antenna Integration

The CGGBP.35.2.A.08 should be placed in the centre of the PCB to take advantage of the ground plane. The RF traces must maintain a 50 Ohm transmission line. Ground vias should be placed around the copper clearance area and the transmission line. Note that depending on the design application, tuning may be required for optimal performance. This may be achieved using a 'pi' matching network or custom tuning of the patch antenna.

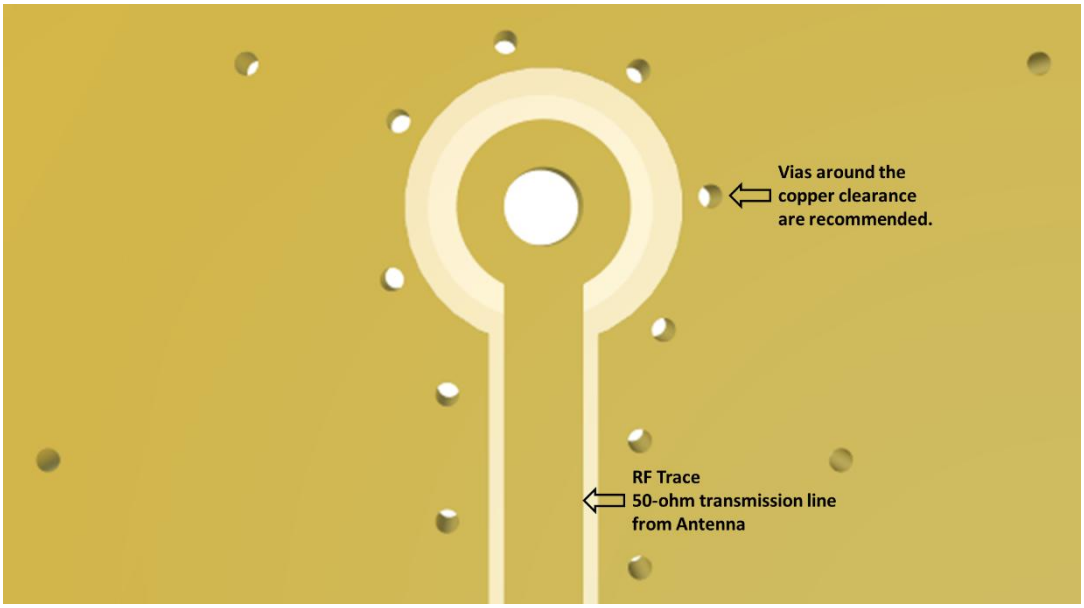

Bottom view of the PCB Reference Design, showing transmission lines and integration notes.

4.5 Final Integration

The bottom side image shown below highlights the antenna transmission line. Taoglas recommends using a minimum of 70x70mm ground plane to ensure optimal performance.

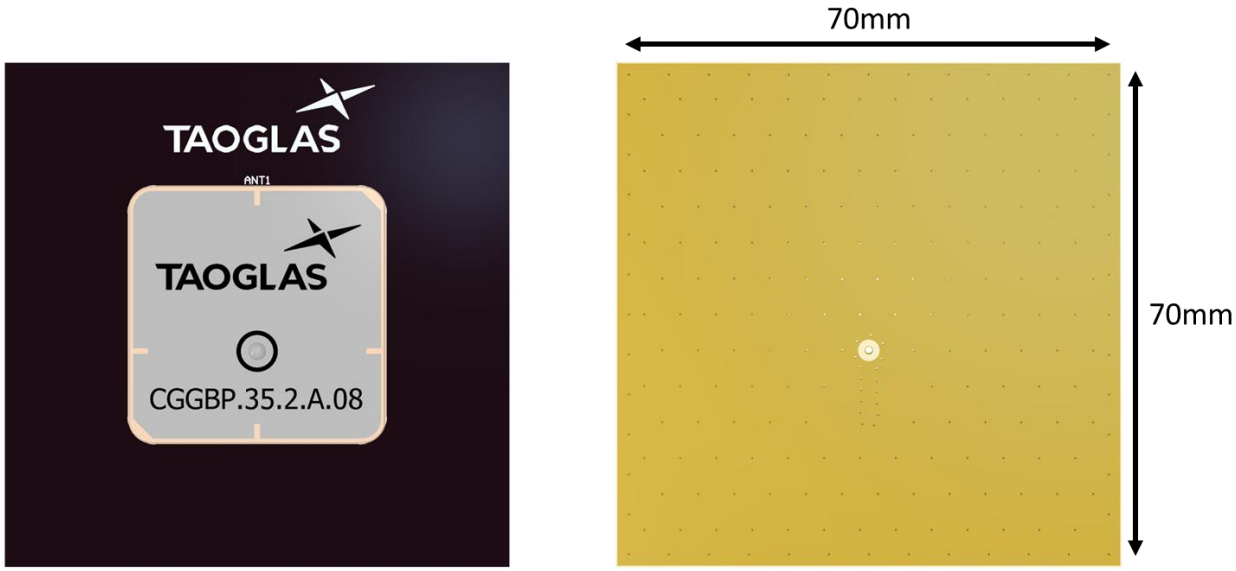

Top Side (70x70mm PCB Reference Design)

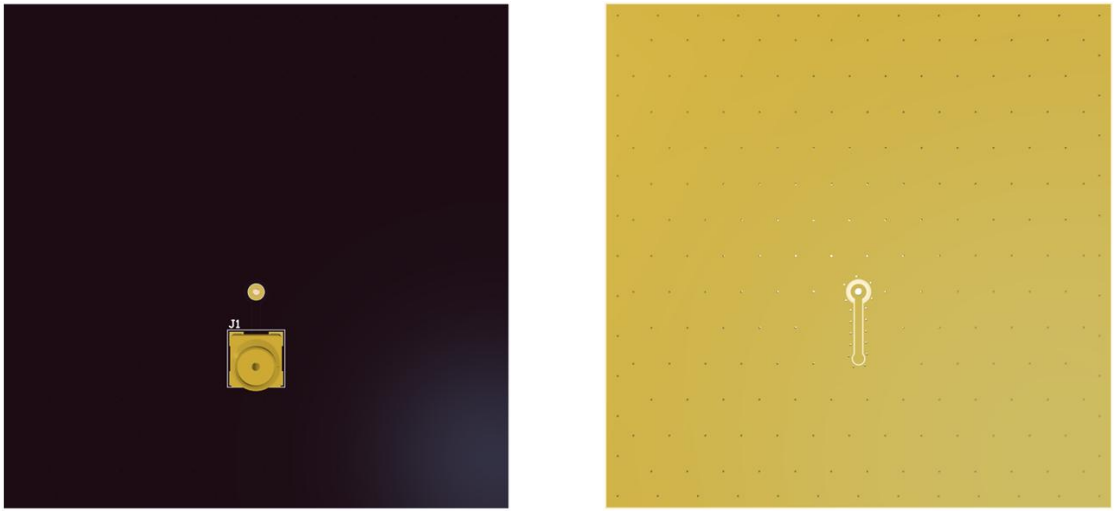

Bottom Side

5. Packaging

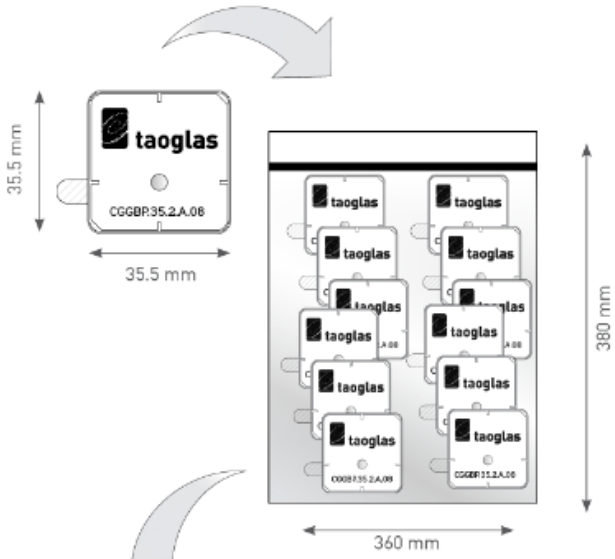

100 pcs CGGBP.35.2.A.08 per PE Bag
Bag Dimensions - 360 x 380mm
Weight - 934.5g

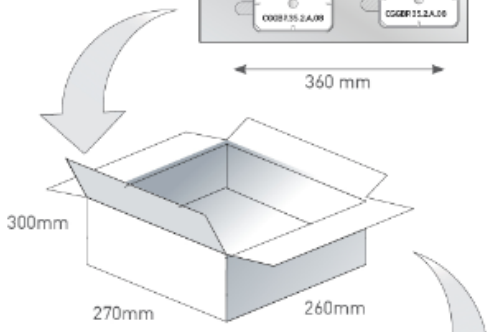

400 pcs CGGBP.35.2.A.08 per Inner Carton
Inner Carton Dimensions - 270*260*300mm
Weight - 4.49kg

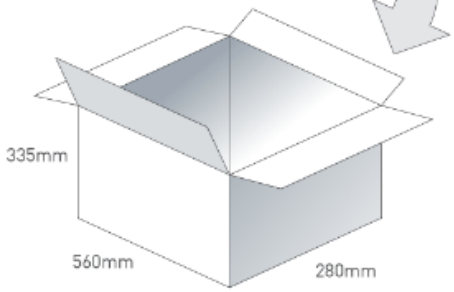

800 pcs CGGBP.35.2.A.08 per Carton
Carton Dimensions - 560*280*335mm
Weight - 8.1kg

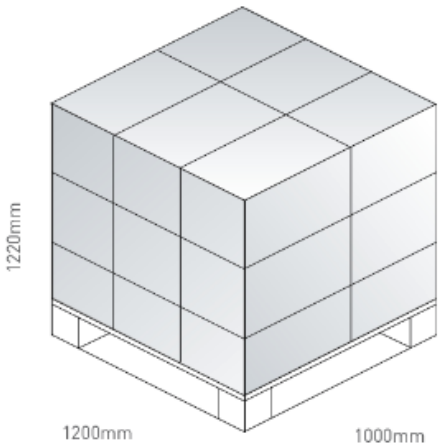

Pallet Dimensions 1200*1000*1220mm
18 Cartons per Pallet
6 Cartons per layer
3 Layers

6. Antenna Characteristics

6.1 Test Setup

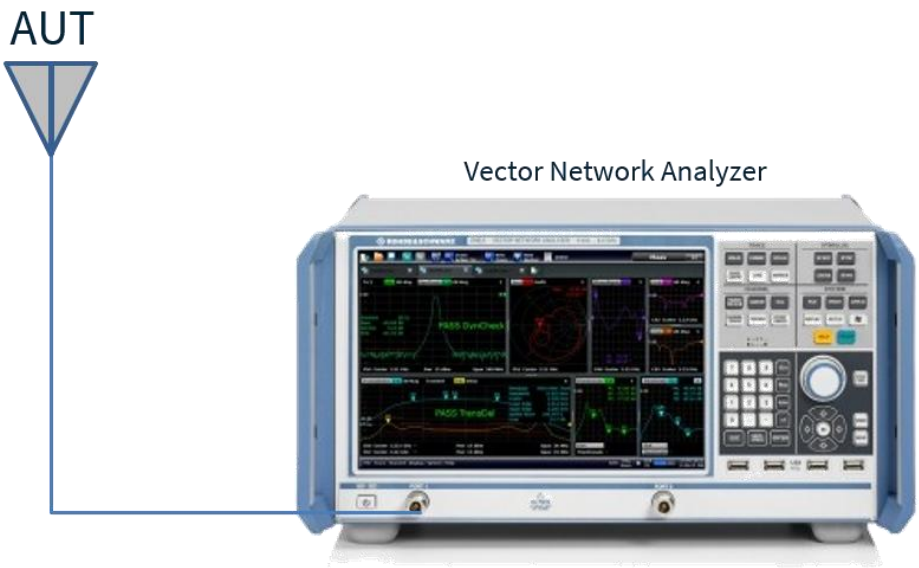

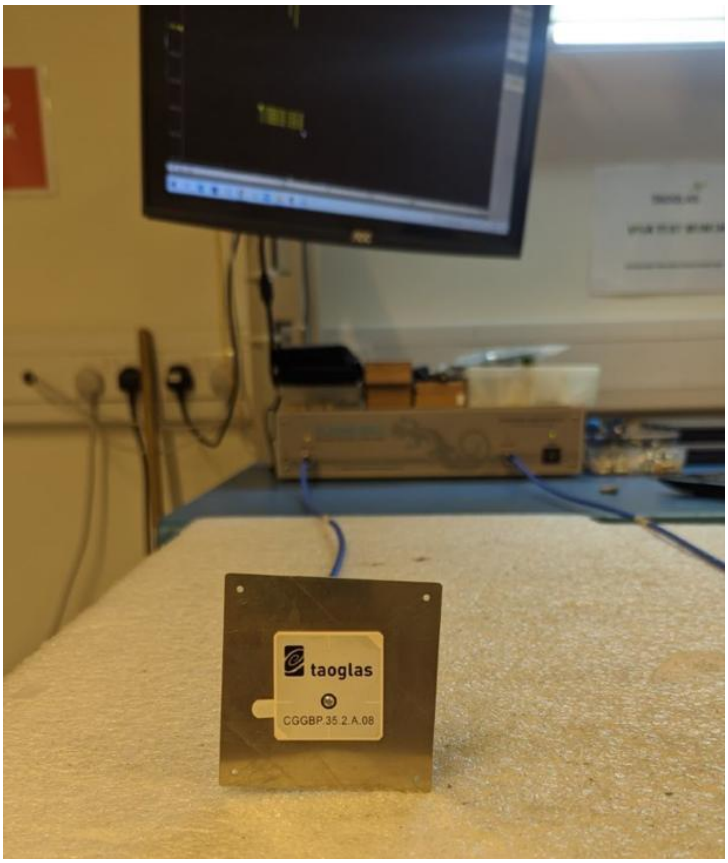

On 70 x 70mm Ground Plane

6.2 Return Loss

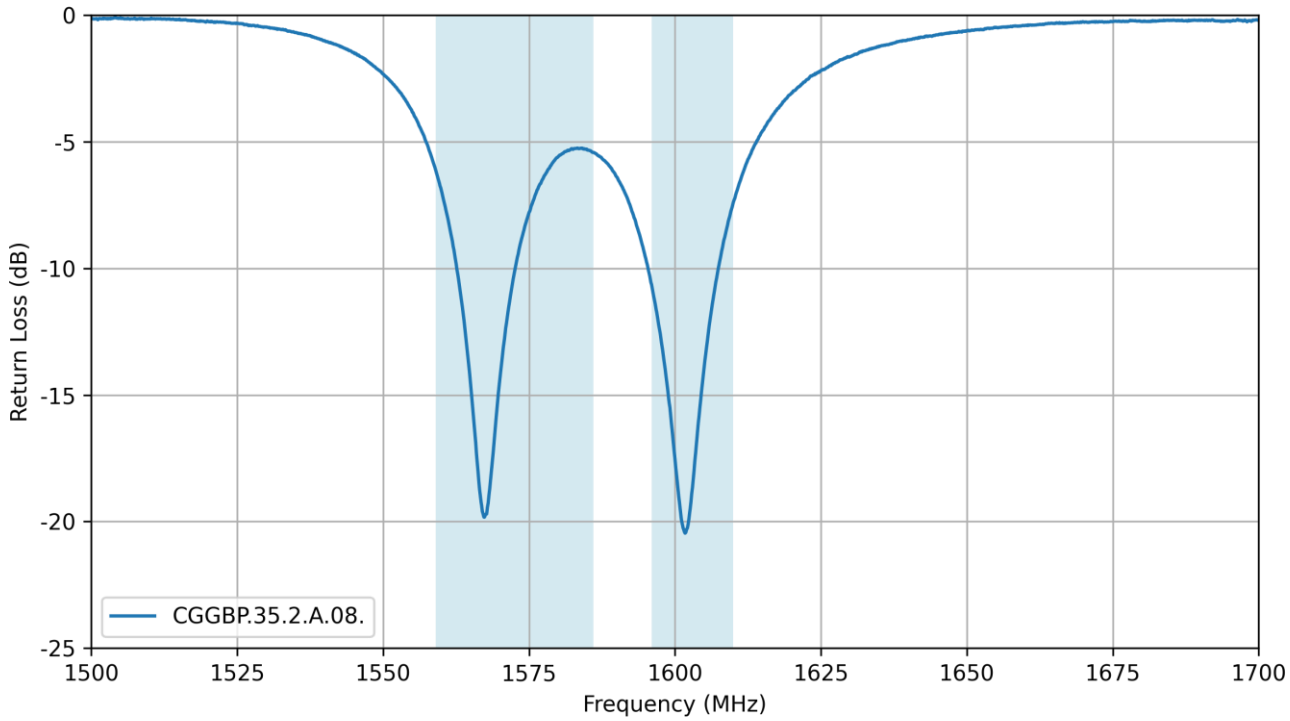

6.3 VSWR

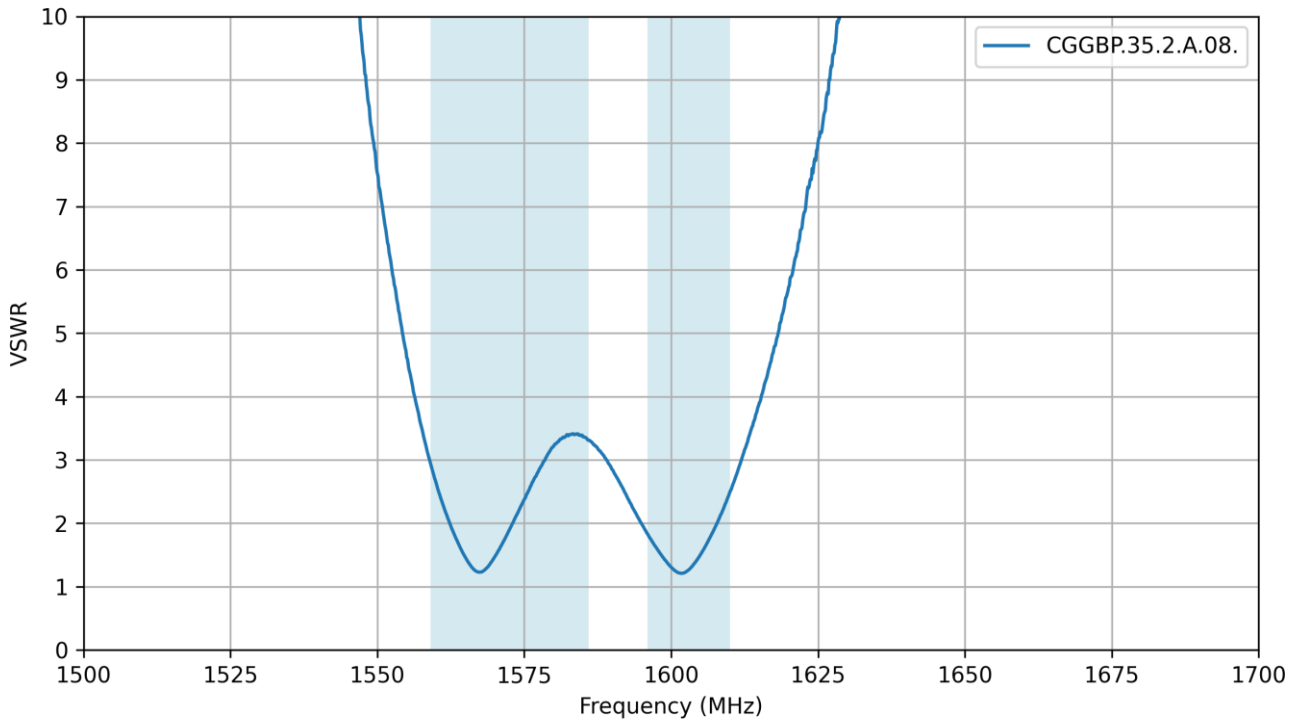

6.4 Efficiency

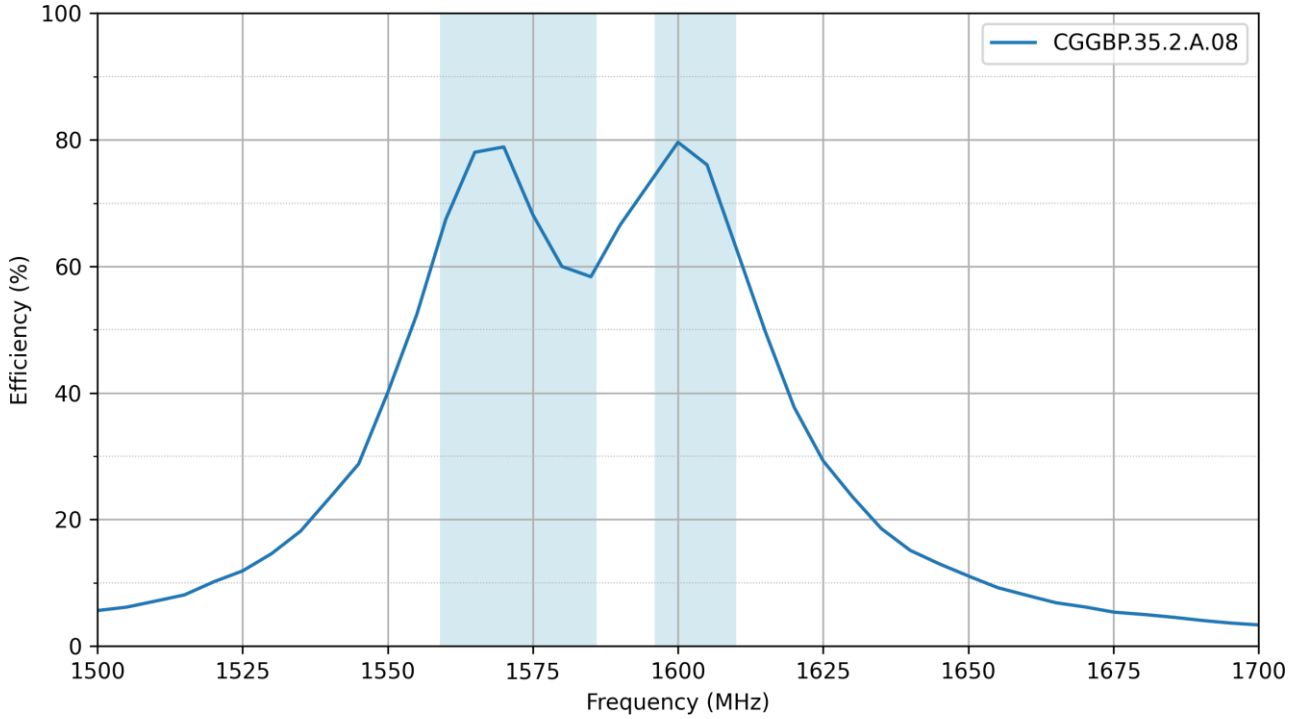

6.5 Average Gain

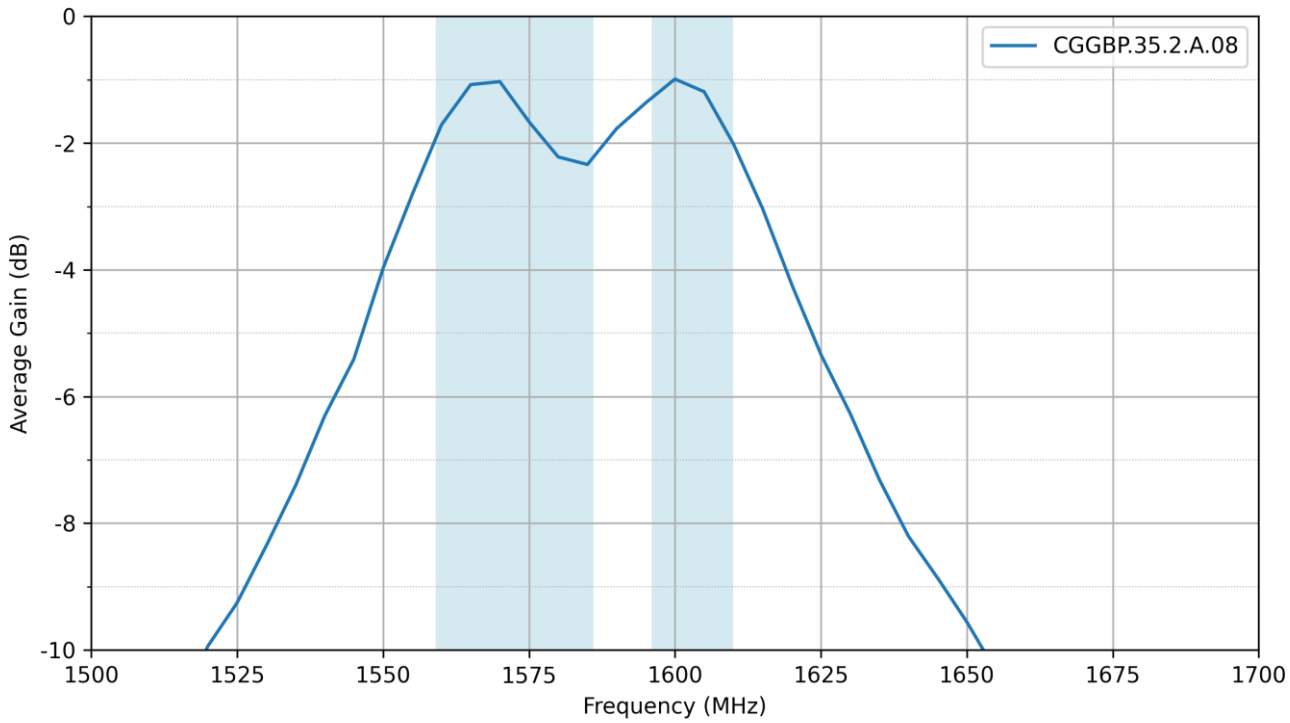

6.6 Peak Gain

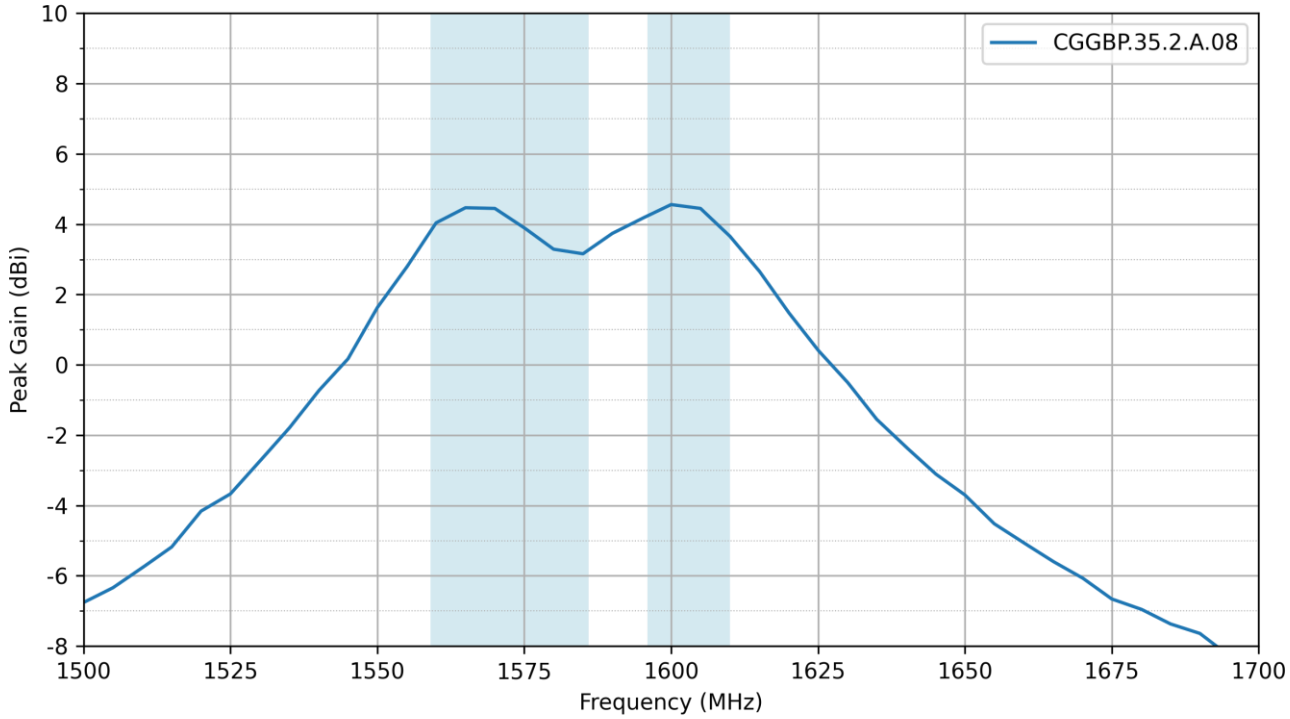
CGGBP.35.2.A.08
Peak Gain (dBi)
10
8
6
4
2
0
-2
-4
-6
-8
1500
1525
1550
1575
1600
1625
1650
1675
1700
Frequency (MHz)

7. Radiation Patterns

7.1 Test Setup

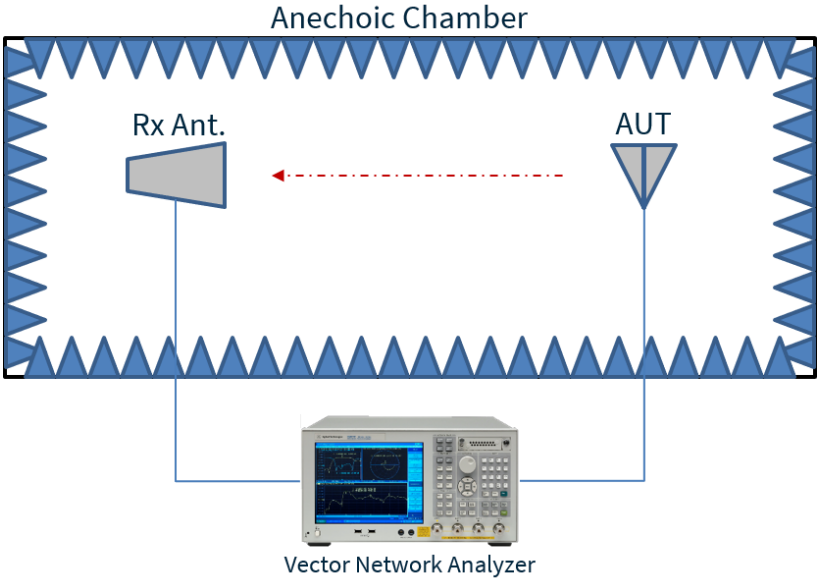

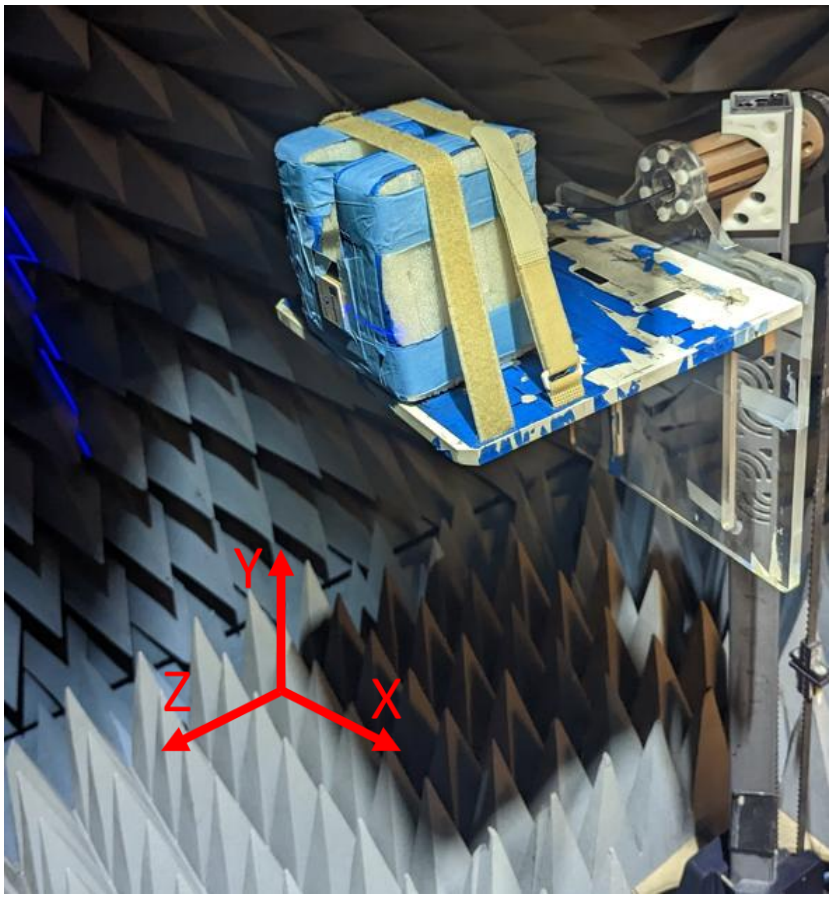

On 70 x 70mm Ground Plane

7.2 Patterns at 1560 MHz

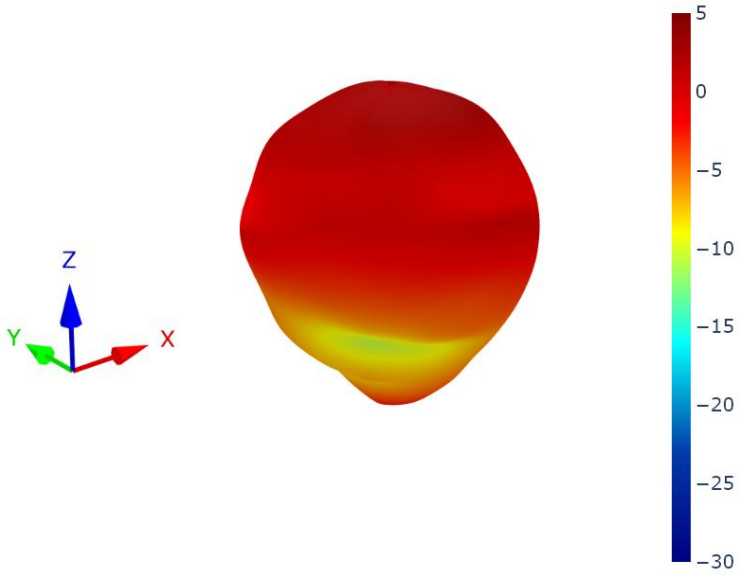

XZ Plane	YZ Plane	XY Plane

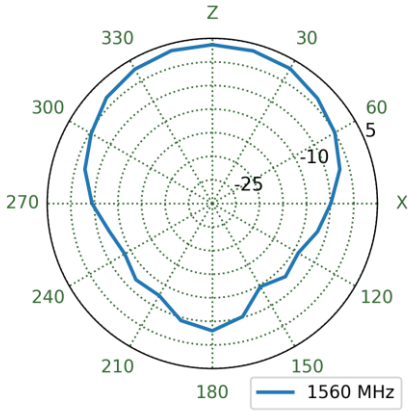

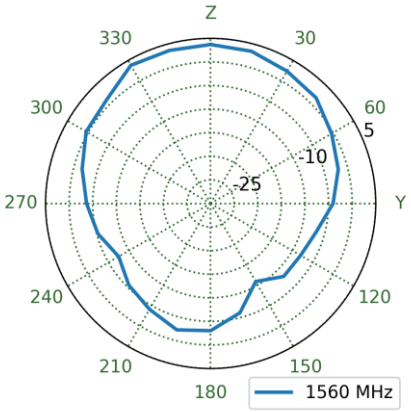

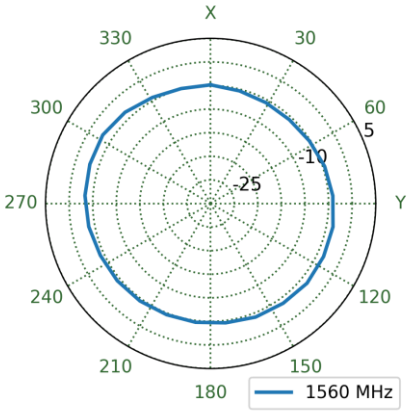

7.3 Patterns at 1575 MHz

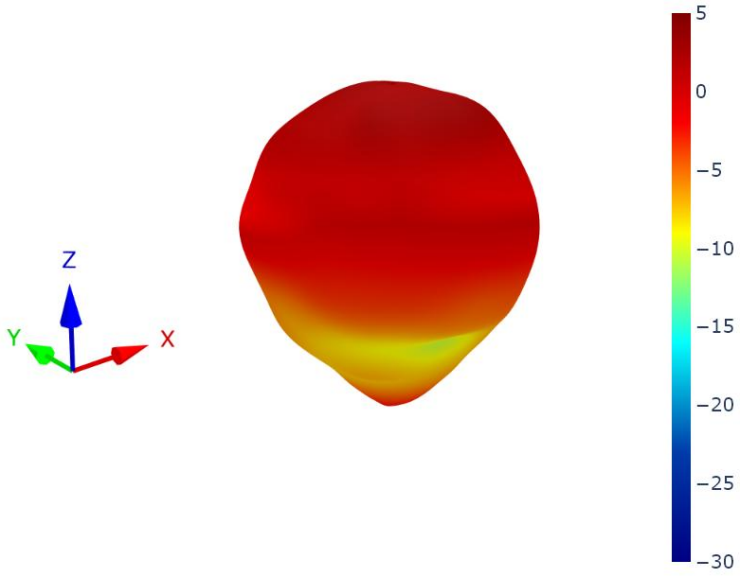

XZ Plane	YZ Plane	XY Plane

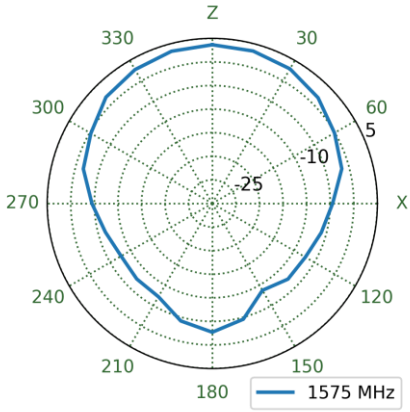

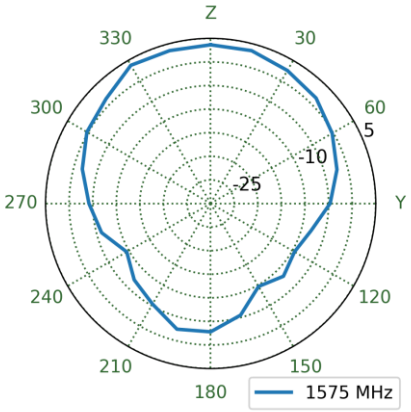

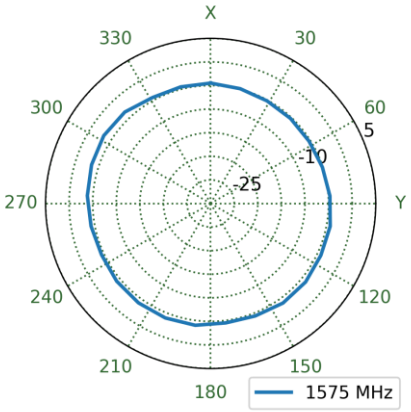

7.4 Patterns at 1605 MHz

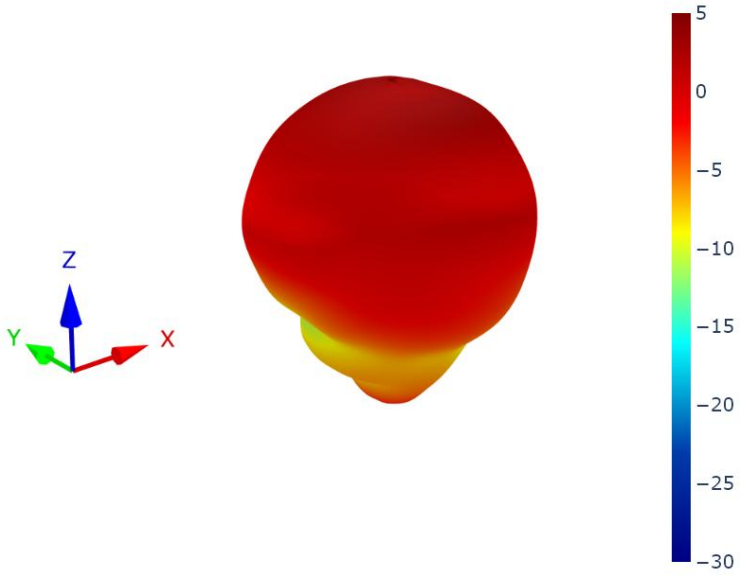

XZ Plane	YZ Plane	XY Plane

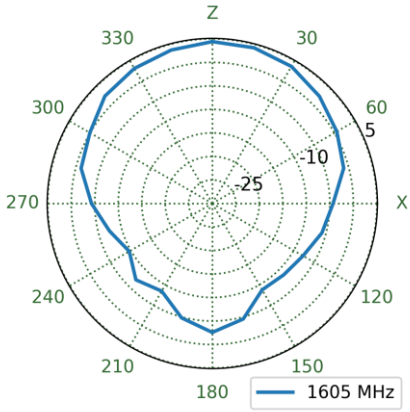

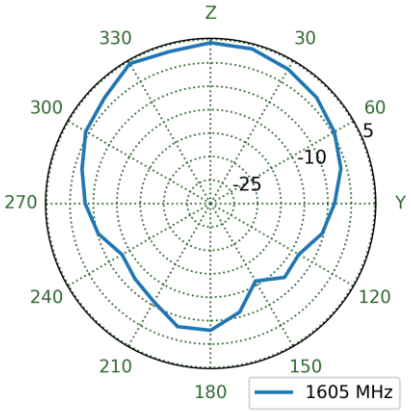

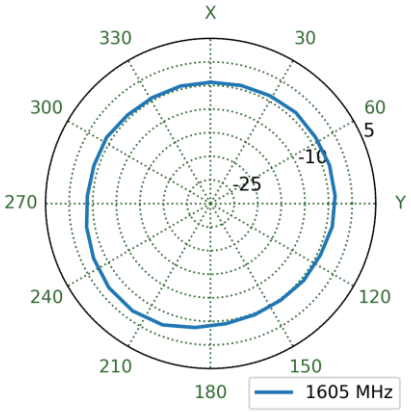

Changelog for the datasheet

SPE-15-8-010 – CGGBP.35.3.A.02

Revision: E (Current Version)	
Date:	2026-02-04
Changes:	Full datasheet update.
Changes Made by:	Gary West

Previous Revisions

Revision: D	
Date:	2023-06-12
Changes:	Updated Antenna Characteristics Updated 3d Radiation Patterns
Changes Made by:	Aswin Biju

Revision: C	
Date:	2023-03-23
Changes:	Integration Guide Added
Changes Made by:	Cesar Sousa

Revision: B	
Date:	2018-12-18
Changes:	Updated Data
Changes Made by:	Jack Conroy

Revision: A (Original First Release)	
Date:	2017-07-18
Notes:	Initial Datasheet Release
Author:	Jack Conroy

TAOGLAS

TAOGLAS®

www.taoglas.com